Part I—Administrative

CHAPTER 1

ADMINISTRATION

Note: Chapter 1 is entirely Seattle amendments to the *International Residential Code* and is not underlined.

SECTION R101
TITLE, SCOPE AND PURPOSE

R101.1 Title. This subtitle shall be known as the "*Seattle Residential Code*" and may be so cited, and is referred to herein as "this code."

[W][S] R101.2 Scope. This code applies to the construction, *alteration*, moving, addition, replacement, demolition, repair, *equipment*, location, removal, use and occupancy of detached one- and two-family dwellings, *adult family homes*, and townhouses not more than three stories above grade plane in height with a separate means of egress and their *accessory structures* not more than three stories above grade plane in height.

Exceptions:

1. Live/work units located in townhouses and complying with the requirements of Section 419 of the *International Building Code* are permitted to be constructed in accordance with this code. Fire suppression *equipment* required by Section 419.5 of the *International Building Code* shall conform to Section P2904 of this code.

[W] 2. Owner-occupied lodging houses with one or two guestrooms are permitted to be constructed in accordance with this code.

[W] 3. Owner-occupied lodging houses with three to five guestrooms are permitted to be constructed in accordance with this code when equipped with a fire sprinkler system that complies with Section P2904.

[S] 4. Floating on-water residences as defined in Seattle Municipal Code Title 23 are not required to comply with this Code.

DRAFT

Note: The seismic design for wood-frame buildings with more than two stories above grade are required to comply with the *International Building Code* or other standards referenced in Section R301.1. See Sections R301.2.2.3 and Table R602.10.3(3).

Interpretation R101.2a: Buildings with mixed occupancies, other than residences with home occupations, are not within the scope of the *Seattle Residential Code* and shall comply with the *Seattle Building Code*.

Interpretation R101.2b: Three or more dwellings located above a common garage or other common space are required to comply with the *Seattle Building Code*. Units in detached one- and two-family dwellings may share common space.

R101.3 Applicability of city laws. A building permit application shall be considered under the applicable city law in effect on the date a valid and fully complete building permit application is submitted or on a date as otherwise required by law.

Exception: For any project for which an associated, unexpired master use permit has been issued, a building permit application shall be considered under the versions of Seattle Municipal Code Title 23, Seattle Land Use Code; Seattle Municipal Code Chapter 25.09, Environmentally Critical Areas regulations; and Seattle Municipal Code Chapter 25.09, Tree Protection regulations in effect on the date established by Seattle Municipal Code Section 23.76.026 or 23.76.032.C.1 for consideration of the master use permit, unless that date is later than the date of the complete building permit application. This exception does not apply to a subdivision or short subdivision component of a master use permit.

Note: Applicable city law includes but is not limited to the Seattle Municipal Code Title 23, Seattle Land Use Code; Seattle Municipal Code Chapter 25.09, Environmentally Critical Areas regulations; Seattle Municipal Code Chapter 25.09, Tree Protection regulations; and the Seattle Residential, Energy, Stormwater, Grading and Side Sewer codes.

R101.3.1 Complete building permit applications. A building permit application is complete if the *building official* determines it meets the requirements of Sections R105.5 through R105.6.4, and the application includes, without limitation, the *construction documents* for the architectural and structural components of the building.

Exception: If the *building official* allows a building permit application to be submitted in phases for portions of a building, each phased portion submittal shall meet the requirements of Sections R105.5 through R105.6.4 applicable to the scope of the allowed phased portion, and the building permit application shall be considered complete for the purposes of Section R101.3 on the date the phased portion submittal that includes the structural frame for the entire building is submitted.

R101.4 Purpose. The purpose of this code is to provide minimum standards to safeguard life or limb, health, property and public welfare by regulating and controlling the design, construction, quality of materials, occupancy, location and maintenance of buildings and structures within the City and certain *equipment* specifically regulated herein. The purpose of this code is to provide for and promote the health, safety and welfare of the general public, and not to create or otherwise establish or designate any particular class or group of persons who will or should be especially protected or benefitted by the terms of this code.

R101.5 Internal consistency. Where in any specific case, different sections of this code specify different materials, methods of construction or other requirements, the most restrictive governs. Where there is a conflict between a general requirement and a specific requirement, the specific requirement governs.

R101.6 Referenced codes and standards. The codes and standards referenced in this code are considered part of this code to the extent prescribed by each such reference. If differences occur between provisions of this code and referenced codes and standards, the provisions of this code apply, except that nothing in this code limits the effect of any provision of the Grading Code, Stormwater Code, or Regulations for Environmentally Critical Areas.

Exception: Where enforcement of a code provision would violate the conditions of the listing of the *equipment* or *appliance*, the conditions of the listing and manufacturer's instructions apply.

R101.7 Appendices. Provisions in the appendices of the *International Residential Code* do not apply unless specifically adopted.

R101.8 Metric units. Wherever in this code there is a conflict between metric units of measurement and U.S. customary units, the U.S. customary units govern.

DRAFT

SECTION R102
UNSAFE BUILDINGS, STRUCTURES OR PREMISES

R102.1 Emergency order. Whenever the *building official* finds that any building or structure or premises, or portion thereof is in such a dangerous and unsafe condition as to constitute an imminent hazard to life or limb, the *building official* may issue an emergency order. The emergency order may (1) direct that the building, structure or premises, or portion thereof be restored to a safe condition by a date certain; (2) require that the building, structure or premises, or portion thereof, be vacated within a reasonable time to be specified in the order, or in the case of extreme danger, may specify immediate vacation of the building, structure or premises, or portion thereof; or (3) authorize immediate disconnection of the utilities or energy source.

R102.1.1 Service of emergency order. The order shall be posted on the premises or personally served on the owner of the building or premises or any person responsible for the condition. The order shall specify the time for compliance.

R102.1.2 Effect of emergency order. No person may occupy a building, structure or premises, or portion thereof, after the date on which the building is required to be vacated until the building, structure or premises, or portion thereof, is restored to a safe condition as required by the order and this code. It is a violation for any person to fail to comply with an emergency order issued by the *building official.*

R102.2 Hazard correction order. Whenever the *building official* finds that an unsafe building, structure or premises exists, the *building official* may issue a hazard correction order specifying the conditions causing the building, structure or premises to be unsafe and directing the owner or other person responsible for the unsafe building, structure or premises to correct the condition by a date certain. In lieu of correction, the owner may submit a report or analysis to the *building official* analyzing said conditions and establishing that the building, structure or premises is, in fact, safe. The *building official* may require that the report or analysis be prepared by a licensed engineer and may require compliance with *International Existing Building Code*.

R102.2.1 Service of hazard correction order. The order shall be served upon the owner, agent or other responsible person by personal service or regular first class mail addressed to the last known address of such person or if no address is available after reasonable inquiry, the order may be posted in a conspicuous place on the premises. The order may also be posted if served by personal service or first class mail.

R102.2.2 Effect of hazard correction order. It is a violation for any person to fail to comply with a hazard correction order as specified in this subsection.

SECTION R103
ENFORCEMENT, VIOLATIONS AND PENALTIES

R103.1 Violations. It is a violation of this code for any person to:

1. Erect, construct, enlarge, repair, move, improve, remove, convert, demolish, equip, occupy, inspect or maintain any building or structure, or cause or permit the same to be done, in the City, contrary to or in violation of any of the provisions of this code;
2. Knowingly aid, abet, counsel, encourage, hire, induce or otherwise procure another to violate or fail to comply with this code;
3. Use any material or to install any device, *appliance* or *equipment* that does not comply with applicable standards of this code or that has not been *approved* by the *building official;*
4. Violate or fail to comply with any notice or order issued by the *building official* pursuant to the provisions of this code or with any requirements of this code;
5. Remove, mutilate, destroy or conceal any notice or order issued or posted by the *building official* pursuant to the provisions of this code, or any notice or order issued or posted by the *building official* in response to a natural disaster or other emergency;
6. Conduct work under a permit without requesting an inspection as required by Section R106.

R103.2 Notice of violation. If, after investigation, the *building official* determines that standards or requirements of this code have been violated or that orders or requirements have not been complied with, the *building official* may issue a notice of violation upon the owner, agent or other person responsible for the action or condition. The notice of violation shall state the standards or requirements violated, shall state what corrective action, if any, is necessary to comply with the standards or requirements, and shall set a reasonable time for compliance.

R103.2.1 Service of notice of violation. The notice shall be served upon the owner, agent or other responsible person by personal service or regular first class mail addressed to the last known address of such person, or if no address is available after reasonable inquiry, the notice may be posted in a conspicuous place on the premises. The notice may also be posted if served by personal service or first class mail. Nothing in this section limits or precludes any action or proceeding to enforce this code, and nothing obligates or requires the *building official* to issue a notice of violation prior to the imposition of civil or criminal penalties.

R103.2.2 Review of notice of violation by the building official. Any person affected by a notice of violation issued pursuant to Section R103.2 may obtain a review of the notice by making a request in writing to the *building official* within ten days after service of the notice. When the last day of the period computed is a Saturday, Sunday, or City holiday, the period runs until 5 p.m. of the next business day.

R103.2.2.1 Review procedure. The review shall occur not less than ten nor more than 20 days after the request is received by the *building official* unless otherwise agreed to by the person requesting the review. Any person affected by the notice of violation may submit additional information to the *building official.* The review shall be made by a representative of the *building official* who will review any additional information that is submitted and the basis for issuance of the notice of violation. The reviewer may request clarification of the information received and may conduct a site visit.

R103.2.2.2 Decision. After the review, the *building official* shall:

1. Sustain the notice;
2. Withdraw the notice;
3. Continue the review to a date certain; or
4. Amend the notice.

R103.2.2.3 Order. The *building official* shall issue an order containing the decision within 15 days of the date that the review is completed and shall cause the order to be mailed by regular first class mail to the persons requesting the review and the persons named on the notice of violation, addressed to their last known address.

R103.3 Stop work orders. The *building official* may issue a stop work order whenever any work is being done contrary to the provisions of this code, or contrary to a permit issued by the *building official,* or in the event of dangerous or unsafe conditions related to construction or demolition. The stop work order shall identify the violation and may prohibit work or other activity on the site.

R103.3.1 Service of stop work order. The *building official* shall serve the stop work order by posting it in a conspicuous place at the site. If posting is not physically possible, then the stop work order may be served by personal service or by regular first class mail to the last known address of: the property owner, the person doing or causing the work to be done, or the holder of a permit if work is being stopped on a permit. For purposes of this section, service is complete at the time of posting or of personal service, or if mailed, three days after the date of mailing. When the last day of the period so computed is a Saturday, Sunday or city holiday, the period runs until 5 p.m. on the next business day.

DRAFT

R103.3.2 Effective date of stop work order. Stop work orders are effective when posted, or if posting is not physically possible, when one of the persons identified in Section R103.3.1 is served or, if notice is mailed, three days after the date of mailing.

R103.3.3 Review of stop work orders by the building official. Any person aggrieved by a stop work order may obtain a review of the order by delivering to the *building official* a request in writing within two business days of the date of service of the stop work order.

R103.3.3.1 Review procedure. The review shall occur within two business days after receipt by the *building official* of the request for review unless otherwise agreed by the person making the request. Any person affected by the stop work order may submit additional information to the *building official* for consideration as part of the review at any time prior to the review. The review will be made by a representative of the *building official* who will review all additional information received and may conduct a site visit.

R103.3.3.2 Decision. After the review, the *building official* may:

1. Sustain the stop work order;
2. Withdraw the stop work order;
3. Modify the stop work order; or
4. Continue the review to a date certain.

R103.3.3.3 Order. The *building official* shall issue an order of the *building official* containing the decision within two business days after the review is completed and shall cause the order to be sent by regular first class mail to the person or persons requesting the review, any person on whom the stop work order was served, and any other person who requested a copy before issuance of the order, addressed to their last known address.

R103.4 Occupancy violations. Whenever any building or structure is being occupied contrary to the provisions of this code, the *building official* may order such occupancy discontinued and the building or structure, or portion thereof, vacated by notice.

R103.4.1 Service of notice of occupancy violation. The notice of occupancy violation shall be served upon the owner, agent or other responsible person by personal service or regular first class mail addressed to the last known address of such person or if no address is available after reasonable inquiry, the notice may be posted in a conspicuous place on the premises. The notice may also be posted if served by personal service or first class mail.

R103.4.2 Compliance with notice of occupancy violation. Any person occupying the building or structure shall discontinue the occupancy by the date specified in the notice of the *building official*, or shall make the building or structure, or portion thereof, comply with the requirements of this code; provided, however, that in the event of an unsafe building, Section 102 may apply.

R103.5 Civil penalties. Any person violating or failing to comply with the provisions of this code shall be subject to a cumulative civil penalty in an amount not to exceed $500 per day for each violation from the date the violation occurs or begins until compliance is achieved. In cases where the *building official* has issued a notice of violation, the violation will be deemed to begin, for purposes of determining the number of days of violation, on the date compliance is required by the notice of violation.

R103.6 Enforcement in Municipal Court. Civil actions to enforce this chapter shall be brought exclusively in Seattle Municipal Court, except as otherwise required by law or court rule. In any civil action for a penalty, the City has the burden of proving by a preponderance of the evidence that a violation exists or existed; the issuance of the notice of violation or of an order following a review by the *building official* is not itself evidence that a violation exists.

R103.7 Judicial review. Because civil actions to enforce Seattle Municipal Code (SMC) Title 22 must be brought exclusively in Seattle Municipal Court pursuant to Section R103.6, orders of the *building official* including notices of violation issued under this chapter are not subject to judicial review pursuant to Chapter 36.70C RCW.

R103.8 Alternative criminal penalty. Anyone who violates or fails to comply with any notice of violation or order issued by the *building official* pursuant to this code or who removes, mutilates, destroys or conceals a notice issued or posted by the *building official* shall, upon conviction thereof, be punished by a fine of not more than $5000 or by imprisonment for not more than 365 days, or by both such fine and imprisonment for each separate violation. Each day's violation shall constitute a separate offense.

R103.9 Additional relief. The *building official* may seek legal or equitable relief to enjoin any acts or practices and abate any condition when necessary to achieve compliance.

R103.10 Administrative review by the building official. Prior to issuance of the building permit, applicants may request administrative review by the *building official* of decisions or actions pertaining to the administration and enforcement of this code. Requests shall be addressed to the *building official.*

R103.11 Administrative review by the Construction Codes Advisory Board. After administrative review by the *building official* and prior to issuance of the building permit, applicants may request review of decisions or actions pertaining to the application and interpretation of this code by the Construction Codes Advisory Board, except for stop work orders, notices of viola-

DRAFT

tions and revocations of permits. The review will be performed by three or more members of the Construction Codes Advisory Board, chosen by the Board Chair. The Chair shall consider the subject of the review and members' expertise when selecting members to conduct a review. The decision of the review panel is advisory only; the final decision is made by the *building official.*

R103.12 Recording of notices. The *building official* may record a copy of any order or notice with the Department of Records and Elections of King County.

R103.13 Appeal to Superior Court. Final decisions of the Seattle Municipal Court on enforcement actions authorized by Title 22 may be appealed pursuant to the Rules for Appeal of Decisions of Courts of Limited Jurisdiction.

SECTION R104
ORGANIZATION AND DUTIES

R104.1 Jurisdiction of Department of Construction and Inspections. The Department of Construction and Inspections is authorized to administer and enforce this code. The Department of Construction and Inspections is under the administrative and operational control of the Director, who is the *building official.*

R104.2 Designees. The *building official* may appoint such officers, inspectors, assistants and employees as are authorized from time to time. The *building official* may authorize such employees and other agents as may be necessary to carry out the functions of the *building official.*

R104.3 Right of entry. With the consent of the owner or occupier of a building or premises, or pursuant to a lawfully issued warrant, the *building official* may enter a building or premises at any reasonable time to perform the duties imposed by this code.

R104.4 Modifications. The *building official* may modify the requirements of this code for individual cases provided the *building official* finds: (1) there are practical difficulties involved in carrying out the provisions of this code; (2) the modification is in conformity with the intent and purpose of this code; and (3) the modification will provide a reasonable level of strength, effectiveness, fire resistance, durability, safety and sanitation when considered together with other safety features of the building or other relevant circumstances. The *building official* may, but is not required to, record the approval of modifications and any relevant information in the files of the *building official* or on the *approved construction documents.*

R104.5 Alternate materials, methods of construction and design. This code does not prevent the use of any material, design or method of construction not specifically allowed or prohibited by this code, provided the alternate has been *approved* and its use authorized by the *building official.* The *building official* may approve an alternate, provided the *building official* finds that the proposed alternate complies with the provisions of this code and that the alternate, when considered together with other safety features of the building or other relevant circumstances, will provide at least an equivalent level of strength, effectiveness, fire resistance, durability, safety and sanitation. Certain code alternates have been pre-*approved* by the *building official* and are identified in this code as code alternates. The *building official* may require that sufficient evidence or proof be submitted to reasonably substantiate any claims regarding the use or suitability of the alternate. The *building official* may, but is not required to, record the approval of code alternates and any relevant information in the files of the *building official* or on the *approved construction documents.*

R104.6 Flood hazard areas. The *building official* shall not approve modifications or code alternates to any provisions required in flood hazard areas identified in Table R301.2(1) unless the *building official* has determined that any of the following conditions exist:

1. There is good and sufficient cause showing that the unique characteristics of the size, configuration or topography of the site render the elevation standards of Section R322 inappropriate.
2. Failure to approve the modification or code alternate would result in exceptional hardship render the *lot* undevelopable.
3. The approval of the modification or code alternate will not result in increased flood heights, additional threats to public safety, or additional public expense.

Any modification or code alternate that is *approved* shall be the minimum necessary to afford relief, considering the flood hazard.

If a modification or code alternate is *approved*, the *building official* shall give written notice to the applicant that describes the difference between the design flood elevation and the elevation to which the building is to be built, warns that the cost of flood insurance will be commensurate with the increased risk resulting from the reduced floor elevation, and states that construction below the design flood elevation increases risks to life and property.

R104.7 Tests. Whenever there is insufficient evidence of compliance with any of the provisions of this code or evidence that any material or construction does not conform to the requirements of this code, the *building official* may require tests as proof of compliance to be made at no expense to the City. Test methods shall be specified by this code or by other recognized test standards. If there are no recognized and accepted test methods for the proposed alternate, the *building official* shall determine the

DRAFT

test procedures. All tests shall be made by an *approved agency*. Reports of such tests shall be retained by the *building official* for the period required for retention of public records.

R104.8 Rules of the building official. The *building official* has authority to issue interpretations of this code and to adopt and enforce rules and regulations supplemental to this code as may be deemed necessary in order to clarify the application of the provisions of this code. Such interpretations, rules and regulations shall be in conformity with the intent and purpose of this code.

R104.8.1 Procedure. The *building official* shall promulgate, adopt and issue rules according to the procedures specified in the Administrative Code, Chapter 3.02 of the *Seattle Municipal Code.*

R104.9 Liability. Nothing in this code is intended to be nor shall be construed to create or form the basis for any liability on the part of the City, or its officers, employees or agents, for any injury or damage resulting from the failure of a building to conform to the provisions of this code, or by reason or as a consequence of any inspection, notice, order, certificate, permission or approval authorized or issued or done in connection with the implementation or enforcement of this code, or by reason of any action or inaction on the part of the City related in any manner to the enforcement of this code by its officers, employees or agents.

This code shall not be construed to relieve or lessen the responsibility of any person owning, operating or controlling any building or structure for any damages to persons or property caused by defects, nor shall the Department of Construction and Inspections or the City of Seattle be held to have assumed any such liability by reason of the inspections authorized by this code or any permits or certificates issued under this code.

R104.10 Responsibilities of parties.

R104.10.1 Responsibility for compliance. Compliance with the requirements of this code is the obligation of the owner of the building, structure, or premises; the duly authorized agent of the owner; and other persons responsible for the condition or work, and not of the City or any of its officers, employees or agents.

R104.10.2 Responsibility of design professional, contractor, plans examiner and inspector. The responsibilities of the *design professional* in responsible charge, contractor, plans examiner, and field inspector are as provided in the *International Building Code* Section 104.10.

DRAFT

SECTION R105
BUILDING PERMITS

R105.1 Permits required. Except as otherwise specifically provided in this code, a building permit shall be obtained from the *building official* for each building or structure prior to erecting, constructing, enlarging, altering, repairing, moving, improving, removing, changing the occupancy of, or demolishing such building or structure, or allowing the same to be done. All work shall comply with this code, even where no permit is required.

R105.2 Work exempt from permit. A building permit is not required for the work listed below. Exemption from the permit requirements of this code does not authorize any work to be done in any manner in violation of this code or any other laws or ordinances of the City.

1. Minor repairs or *alterations* if the value of construction, as determined by the *building official*, is $6,000 or less in any six month period. Such repairs and *alterations* shall not include the removal, reduction, *alteration* or relocation of any loadbearing support. Egress, light, ventilation and fire-resistance shall not be reduced without a permit.
2. Minor work including the following, provided no changes are made to the building envelope: patio and concrete slabs on grade; painting or cleaning a building; repointing a chimney; installing kitchen cabinets, paneling or other surface finishes over existing wall and ceiling systems; insulating existing buildings; abatement of hazardous materials; and in-kind or similar replacement of or repair of deteriorated members of a structure.
3. One-story detached accessory buildings used for greenhouse, tool or storage shed, playhouse, or similar uses, if:
   - 3.1. The projected roof area does not exceed 120 square feet; and
   - 3.2. The building is not placed on a concrete foundation other than a slab on grade.
4. Fences not over 8 feet high that do not have masonry or concrete elements above 6 feet.
5. Arbors and other open-framed landscape structures not exceeding 120 square feet in projected area.
6. Retaining walls and rockeries which are not over 4 feet in height measured from the bottom of the footing to the top of the wall, if:
   - 6.1. There is no surcharge or impoundment of Class I, II or III-A liquids;
   - 6.2. The wall or rockery is not located in an Environmentally Critical Area (ECA) or ECA buffer pursuant to chapter 25.09 of the *Seattle Municipal Code;*

6.3. Construction does not support soils in a steep slope area, potential landslide area or known slide area as identified in the Seattle Environmentally Critical Areas Ordinance, Section 25.09.020 of the *Seattle Municipal Code.*

6.4. Possible failure would likely cause no damage to adjoining property or structures.

7. Platforms, walks and driveways not more than 18 inches above grade and not over any *basement* or story below.
8. Window awnings supported by an *exterior wall* when projecting not more than 54 inches.
9. Prefabricated swimming pools, spas and similar *equipment* accessory to a building subject to this code in which the pool walls are entirely above the adjacent grade and if the capacity does not exceed 5,000 gallons.
10. Replacement of siding. This shall not include structural changes, replacement of sheathing or *alteration* to doors and windows. See Energy Code Sections R503.1.1, Exceptions 2 and 3.
11. Roof recover.
12. Roof replacement if no changes are made to the building envelope other than adding or replacing insulation, and the work is equivalent to or better than the existing structure. Permits are required for structural changes and replacement of sheathing of any size. See Energy Code Sections R503.1.1, Exceptions 2 and 3 for insulation requirements for existing buildings.
13. Private playground *equipment* including tree houses.
14. Removal and/or replacement of underground storage tanks that are subject to regulation by a state or federal agency.

Note: A Fire Department permit is required for removal, replacement and decommissioning of underground storage tanks.

15. Installation of dish and panel antennas 6.56 feet (2 m) or less in diameter or diagonal measurement.
16. Portable heating *appliances*, portable ventilating *equipment* and portable cooling units, if the total capacity of these portable *appliances* does not exceed 40 percent of the cumulative heating, cooling or ventilating requirements of a building or *dwelling unit* and does not exceed 3 kW or 10,000 Btu input.
17. Any closed system of steam, hot or chilled water *piping* within heating or cooling *equipment* regulated by this code.
18. Minor work or the replacement of any component part of a mechanical system that does not alter its original approval and complies with other applicable requirements of this code.
19. Water tanks not located in Environmentally Critical Areas that are supported directly on grade if the capacity is not greater than 5,000 gallons (18 925 L) the ratio of height to diameter or width is not greater than 2:1.

R105.3 Other permits required. Unless otherwise exempted by this or other pertinent codes, separate master use, plumbing, electrical, mechanical and other permits may be required for the above exempted items.

R105.4 Flood hazard areas. In addition to the permit required by this section, all work to be performed in areas of special flood hazard, as defined in Chapter 25.06 of the *Seattle Municipal Code* are subject to additional standards and requirements, including floodplain development approval or a Floodplain Development License, as set forth in Chapter 25.06, the Seattle Floodplain Development Ordinance.

R105.5 Application for permit. To obtain a permit, the applicant shall first file an application in a format determined by the *building official.* Every such application shall:

1. Identify and describe the work to be covered by the permit for which application is made.
2. Describe the land on which the proposed work is to be done by legal description, property address or similar description that will readily identify and definitely locate the proposed building or work.
3. Provide the contractor's business name, address, phone number and current contractor registration number (required if contractor has been selected).
4. Be accompanied by *construction documents,* including plans and other data required in Section R105.6.
5. State the valuation of any new building or structure or any addition, remodeling or *alteration* to an existing building, including cost breakdown between additions and *alterations*.
6. Be signed by the owner of the property or building, or the owner's authorized agent, who may be required to submit evidence to indicate such authority.
7. Give such other data and information as may be required by the *building official*, including, but not limited to, master use and shoreline permits and building identification plans.
8. State the name of the owner and contractor and the name, address and phone number of a contact person.
9. Substantially conform with applicable city law in effect on the date described in Section R101.3, as modified by any exception.

DRAFT

10. Applications that include a grading component shall include all information prescribed by the Grading Code and rules adopted thereunder, and all additional information required by the *building official* pursuant to the Grading Code and rules adopted thereunder.

[W] R105.6 Submittal documents. Submittal documents consisting of *construction documents* and other data shall be submitted in two or more sets, or in a digital format where allowed by the building official, with each application for a *permit.* The *construction documents* shall be prepared by a registered *design professional* where required by the statutes of the *jurisdiction* in which the project is to be constructed. Computations, stress diagrams, shop and fabrication drawings and other data sufficient to show the adequacy of the plans shall be submitted when required by the *building official.* Where special conditions exist, the *building official* is authorized to require additional *construction documents* to be prepared by a registered *design professional.*

Exception: The *building official* is authorized to waive the submission of *construction documents* and other data not required to be prepared by a registered *design professional* if it is found that the nature of the work applied for is such that reviewing of *construction documents* is not necessary to obtain compliance with this code.

R105.6.1 Preparation by registered design professionals. *Construction documents* for all work shall be prepared and designed by or under the direct supervision of an architect or structural engineer licensed to practice under the laws of the State of Washington. Each sheet of *construction documents* shall bear the seal and the signature of the registered *design professional* before the permit is issued.

Exceptions:

1. When authorized by the *building official, construction documents* need not be prepared by an engineer or architect licensed by the State of Washington for the following:
   1.1. Detached one- and two-family dwellings.
   1.2. New buildings or structures, and additions, *alterations* or repairs made to them of wood light-frame construction, if the value of construction, as determined by the *building official,* is less than $75,000.
   1.3. Nonstructural *alterations* and repairs if the value of construction, as determined by the *building official,* is less than $75,000, excluding the value of electrical and mechanical systems, fixtures, *equipment,* interior finish and millwork.
   1.4. Other work as specified in rules promulgated by the *building official.*
2. When authorized by the *building official, construction documents* for assembly line products or designed specialty structural products may be designed by a registered professional engineer.

Interpretation R105.6: Exception 1 does not include buildings with steel moment frames, or extensive or more complex concrete structures such as concrete frame, mild reinforced or post-tensioned floor slabs. These buildings are required to be designed by a licensed structural engineer.

DRAFT

R105.6.1.1 Design professional in responsible charge. The *building official* is authorized to require the owner to engage and designate on the building permit application a registered *design professional* who shall act as the registered *design professional* in responsible charge. If the circumstances require, the owner shall designate a substitute registered *design professional* in responsible charge who shall perform the duties required of the original registered *design professional* in responsible charge. The *building official* shall be notified in writing by the owner if the registered *design professional* in responsible charge is changed or is unable to continue to perform the duties. The registered *design professional* in responsible charge is responsible for reviewing and coordinating submittal documents prepared by others, including phased and deferred submittal items, for compatibility with the design of the building.

R105.6.2 Information required on construction documents. *Construction documents* shall include the following, as applicable:

1. A plot plan showing the width of streets, alleys, *yards* and courts.
2. The location (and/or location within a building), floor area, story, height and use defined by the Land Use Code of the proposed building and of every existing building on the property.
3. Where there are more than two buildings located on a property, a building identification plan identifying the location of each building on the property and identifying each building by a numbering system unrelated to address. Such plan is not required where a plan for the site is already on file and no new buildings are being added to the site.
4. Types of heating and air conditioning systems.
5. Architectural plans, including floor plans, elevations and door and finish schedules showing location of all doors, windows, mechanical *equipment,* shafts, pipes, vents and ducts.
6. Structural plans, including foundation plan and framing plans.

7. Cross-sections and construction details for both architectural and structural plans, including wall sections, foundation, floor and roof details, connections of structural members and types of construction material.
8. Topographic plans, including original and final contours, location of all buildings and structures on the site and, when required by the *building official*, adjacent to the site, and cubic yards of cut and fill.
9. If the *building official* has reason to believe that there may be an intrusion into required open areas or over the property line, a survey of the property prepared by a land surveyor licensed by the State of Washington is required for all new construction, and for additions or accessory buildings.
10. If any building or structure is to be erected or constructed on property abutting an unimproved or partially improved street or alley, the plans shall also include a profile showing the established or proposed grade of the street or alley, based upon information obtained from the Director of Transportation relating to the proposed finished elevations of the property and improvements thereon.

R105.6.3 Information on first sheet. The first or general note sheet of each set of plans shall specify the following, as applicable:

1. The building and street address of the work.
2. The name and address of the owner and person who prepared the plans.
3. Legal description of the property.
4. Type of occupancy of all parts of the building as defined in this code, including notation of fixed fire protection devices or systems.
5. Zoning classification of the property and existing and proposed uses of the structure(s) as defined in the *Land Use Code*.
6. Number of stories and *basements* as defined in this code.
7. Variances, conditional uses, special exceptions, including project numbers, approval and approval extension dates.

R105.6.4 Structural notes. Plans shall include applicable information including, but not limited to, the following:

1. Design loads: Snow load, live loads and lateral loads. If required by the *building official*, the structural notes for plans engineered to ASCE 7 shall include the factors of the base shear formula used in the design;
2. Foundations: Foundation investigations, allowable bearing pressure for spread footings, allowable load capacity of piles, lateral earth pressure;
3. Masonry: Type and strength of units, strength or proportions of mortar and grout, type and strength of reinforcement, method of testing, design strength;
4. Wood: Species or species groups, and grades of sawn lumber, glued-laminated lumber, plywood and assemblies, type of fasteners;
5. Concrete: Design strengths, mix designs, type and strength of reinforcing steel, welding of reinforcing steel, restrictions, if any; and
6. Steel and aluminum: Specification types, grades and strengths, welding electrode types and strengths.

In lieu of detailed structural notes, the *building official* may approve minor references on the plans to a specific section or part of this code or other ordinances or laws.

R105.6.5 Deferred submittals. Deferral of any submittal items shall have the prior approval of the *building official*. The *registered design professional in responsible charge* shall list *deferred submittals* on the *plans* for review by the *building official*.

Documents for *deferred submittal* items shall be submitted to the *registered design professional in responsible charge* who shall review them and forward them to the *building official* with a notation indicating that the *deferred submittal* documents have been reviewed and been found to be in general conformance to the design of the building. The *deferred submittal* items shall not be installed until the *deferred submittal* documents have been *approved* by the *building official*.

R105.6.6 Information for construction in flood hazard areas. For buildings and structures located in whole or in part in flood hazard areas identified in Table R301.2(1), *construction documents* shall also include:

1. Delineation of flood hazard areas, floodway boundaries, flood zones, and design flood elevations, as appropriate.
2. The elevation of the proposed lowest floor, including *basement;* and in areas of shallow flooding (AO Zones), the height of the proposed lowest floor, including *basement*, above the highest adjacent *grade*.
3. The elevation of the bottom of the lowest horizontal structural member in coastal high hazard areas (V Zone) and in Coastal A Zones where such zones are delineated on flood hazard maps identified in Table R301.2(1) or otherwise delineated by the *jurisdiction*.

DRAFT

4. If design flood elevations are not included on the community's Flood Insurance Rate Map (FIRM), the *building official* and the applicant shall obtain and reasonably utilize any design flood elevation and floodway data available from other sources.

R105.6.7 Construction and Demolition Waste: The information in Sections R105.6.7.1 and R105.6.7.2 shall be submitted for projects generating construction or demolition material for salvage, recycling or disposal:

Exception: Projects for which an emergency order or hazard correction order has been issued pursuant to Section R102.

R105.6.7.1 Application Submittal Requirements. The following information shall be provided at the time of application submittal for *building alterations* and the demolition of *existing buildings* having a work area greater than 750 square feet or a project value greater than $75,000:

1. A salvage assessment completed by an *approved agency* identifying building components having potential to be salvaged prior to building removal. The building owner is permitted to complete the assessment for building *alterations* that include some demolition.
2. A statement of compliance with the regulations of the Puget Sound Clean Air Agency regarding asbestos identification, notification, and abatement.

R105.6.7.2 Waste Diversion Report. A Waste Diversion Report shall be submitted within 60 days of final inspection approval. The Waste Diversion Report shall identify the weight or volume of project-generated construction waste and demolition material; the hauler of the material; and the receiving facility or location for each commodity. A signed affidavit from the receiving party and photo documentation shall be included for salvaged materials in which a tip receipt cannot be obtained.

R105.6.8 Clarity of plans. Plans shall be drawn to a clearly indicated and commonly accepted scale in a format determined by the *building official*.

R105.7 Application review. The *construction documents* shall be reviewed by the *building official*. Such *construction documents* may be reviewed by other departments of the City to check compliance with the laws and ordinances under their jurisdiction.

R105.7.1 Determination of completeness. Within 28 days after an application is filed, the *building official* shall notify the applicant in writing either that the application is complete or that it is not complete, and if not complete, what additional information is required to make it complete. Within 14 days after receiving the additional information, the *building official* shall notify the applicant in writing whether the application is now complete or what additional information is necessary. An application shall be deemed to be complete if the *building official* does not notify the applicant in writing by the deadlines in this section that the application is incomplete.

R105.7.2 Decision on application. Except as provided in Section R105.10, the *building official* shall approve, condition or deny the application within 120 days after the *building official* notifies the applicant that the application is complete.

To determine the number of days that have elapsed after the notification that the application is complete, the following periods shall be excluded:

1. All periods of time during which the applicant has been requested by the Director to correct plans, perform required studies, or provide additional required information, until the determination that the request has been satisfied. The period shall be calculated from the date the *building official* notifies the applicant of the need for additional information until the earlier of the date the *building official* determines whether the additional information satisfies the request for information or 14 days after the date the information has been provided to the *building official*.
2. If the *building official* determines that the information submitted by the applicant under item 1 of this subsection is insufficient, the *building official* shall notify the applicant of the deficiencies, and the procedures under item 1 of this subsection shall apply as if a new request for information had been made;
3. All extensions of time mutually agreed upon by the applicant and the *building official*.

If a project permit application is substantially revised by the applicant, the time period shall start from the date at which the revised project application is determined to be complete under Section R101.3.1.

R105.7.3 Determination of substantially improved or substantially damaged existing buildings in flood hazard areas. For applications for reconstruction, rehabilitation, *addition*, *alteration*, repair or other improvement of existing buildings or structures located in a flood hazard area identified in Table R301.2(1), the *building official* shall determine the value of the proposed work. For buildings that have sustained damage of any origin, the value of the proposed work shall include the cost to repair the building or structure to its predamaged condition, regardless of the actual repair work performed. If the *building official* finds that the value of proposed work equals or exceeds 50 percent of the market value of the building or structure before the damage occurred or the improvement starts, the proposed work constitutes a substantial improvement and the proposed work shall comply with Section R322.

DRAFT

Substantial improvements do not include:

1. Improvements to a building or structure that are required to correct existing health, sanitary or safety code violations identified by the *building official* and that are the minimum necessary to ensure safe living conditions, or
2. Any *alteration* of a landmark, provided that the *alteration* will not result in rescission of the landmark's landmark designation landmark.

R105.8 Issuance of permit.

R105.8.1 Subject to Section R105.8.2, the *building official* shall issue a permit to the applicant if the *building official* finds the following:

1. The work described in the *construction documents* conforms to the requirements of this code and other pertinent laws, ordinances and regulations and with all conditions imposed under any of them,
2. The fees specified in the Fee Subtitle have been paid, and
3. The applicant has complied with all requirements to be performed prior to issuance of a permit for the work under other pertinent laws, ordinances or regulations or included in a master use permit, or otherwise imposed by the *building official.*

When the permit is issued, the applicant or the applicant's authorized agent becomes the permit holder.

R105.8.2 The *building official* shall not issue a permit if the *building official* has determined that the property owner violated subsection 22.210.136.A of the Seattle Municipal Code and has not obtained any required tenant relocation license.

R105.8.3 Grading permits. The grading component of the building permit is the portion of the building permit that authorizes work that is subject to the requirements of the Grading Code. That component constitutes a grading permit.

R105.8.4 Permit conditions. The *building official* may impose on a permit any conditions authorized by this code or other pertinent ordinances or regulations, including but not limited to the Grading Code, the Stormwater Code, Regulations for Environmentally Critical Areas, and rules adopted pursuant to those codes. The *building official* may condition a permit in order to reduce the risks associated with development, construction, ownership and occupancy including, but not limited to risks in potential slide areas.

R105.8.5 Denial of permits. The *building official* may deny a permit if the *building official* determines that:

1. The risks cannot be reduced to an acceptable level,
2. The proposed project or *construction documents* do not conform to the requirements of this code or other pertinent laws, ordinances or regulations, to requirements included in the Master Use Permit or to requirements otherwise imposed by the *building official* or other City departments, or to requirements otherwise imposed by the *building official* or other City departments, or
3. The applicant has failed to comply with any requirement or condition imposed pursuant to the authority described in Section R105.8.4.

R105.8.6 Compliance with approved construction documents. When the *building official* issues a permit, the *building official* shall endorse the permit in writing or in electronic format and stamp the plans APPROVED. Such *approved* plans and permit shall not be changed, modified or altered without authorization from the *building official,* and all work shall be done in accordance with the *approved construction documents* and permit except as authorized by the *building official* during a field inspection to correct errors or omissions, or as authorized by Section R105.9.

R105.9 Revisions to the permit. When changes to the *approved* work are made during construction, approval of the *building official* shall be obtained prior to execution. The building inspector may approve minor changes to the *construction documents* for work not reducing the structural strength or fire and life safety of the structure. The building inspector shall determine if it is necessary to revise the *approved construction documents.* No changes that are subject to special inspection shall be made during construction unless *approved* by the *building official.* If revised plans are required, changes shall be submitted to and *approved* by the *building official,* accompanied by fees specified in the Fee Subtitle, prior to occupancy. All changes shall conform to the requirements of this code and other pertinent laws and ordinances and other issued permits.

R105.10 Cancellation of permit applications. Applications may be cancelled if no permit is issued by the earlier of the following: (1) twelve months following the date of application; or (2) sixty days from the date of written notice that the permit is ready to issue. After cancellation, *construction documents* submitted for review may be returned to the applicant or destroyed by the *building official.*

The *building official* will notify the applicant in writing at least 30 days before the application is cancelled. The notice shall specify a date by which a request for extension must be submitted in order to avoid cancellation. The date shall be at least two weeks prior to the date on which the application will be cancelled.

R105.10.1 Extensions prior to permit issuance. At the discretion of the *building official,* applications for projects that require more than 12 months to review and approve may be extended for a period that provides reasonable time to complete

DRAFT

the review and approval, but in no case longer than 24 months from the date of the original application. No application may be extended more than once. After cancellation, the applicant shall submit a new application and pay a new fee to restart the permit process.

Notwithstanding other provisions of this code, an application may be extended where issuance of the permit is delayed by litigation, preparation of environmental impact statements, appeals, strikes or other causes related to the application that are beyond the applicant's control, or while the applicant is making progress toward issuance of a master use permit.

R105.11 Retention of plans. One set of *approved* plans, which may be on microfilm or in electronic format, shall be retained by the *building official.* One set of *approved* plans shall be returned to the applicant and shall be kept at the site of the building or work for use by inspection personnel at all times during which the work authorized is in progress.

R105.12 Validity of permit. The issuance or granting of a permit or approval of *construction documents* shall:

1. Not be construed to be a permit for, or an approval of, any violation of any of the provisions of this code or other pertinent laws and ordinances;
2. Not prevent the *building official* from requiring the correction of errors in the *construction documents* or from preventing building operations being carried on thereunder when in violation of this code or of other pertinent laws and ordinances of the City;
3. Not prevent the *building official* from requiring correction of conditions found to be in violation of this code or other pertinent laws and ordinances of the City; or
4. Not be construed to extend the period of time for which any such permit is issued or otherwise affect any period of time for compliance specified in any notice or order issued by the *building official* or other administrative authority requiring the correction of any such conditions.

R105.13 Expiration of permits. Authority to do the work authorized by a permit expires 18 months from the date of issuance. An *approved* renewal extends the life of the permit for an additional 18 months from the prior expiration date. An *approved* reestablishment extends the life of the permit for 18 months from the date the permit expired.

Exceptions:

1. Initial permits for major construction projects that require more than 18 months to complete may be issued for a period that provides reasonable time to complete the work, according to an *approved* construction schedule. The *building official* may authorize a permit expiration date not to exceed three years from the date of issuance, except when there is an associated Shoreline Substantial Development permit in which case the *building official* may authorize an expiration date not to exceed the life of the Shoreline permit.
2. The *building official* may issue permits which expire in less than 18 months if the *building official* determines a shorter period is appropriate to complete the work.

This section is subject to the limitations in *Seattle Municipal Code* Section 22.800.100, Seattle Stormwater Code.

R105.14 Renewal of permits. Permits may be renewed and renewed permits may be further renewed by the *building official* if the following conditions are met:

1. Application for renewal is made within the 30 day period immediately preceding the date of expiration of the permit; and
2. If the project has had an associated discretionary Land Use review, the land use approval has not expired; and
3. If an application for renewal is made more than 18 months after the date of mandatory compliance with a new or revised edition of the *Seattle Residential Code*, the permit shall not be renewed unless:
   - 3.1. The *building official* determines that the permit complies, or is modified to comply, with the Seattle Residential, Energy, Stormwater, Side Sewer and Grading codes in effect on the date of application for renewal; or
   - 3.2. The work authorized by the permit is substantially underway and progressing at a rate *approved* by the *building official.* "Substantially underway" means that normally required building inspections have been *approved* for work such as foundations, framing, mechanical, insulation and finish work that is being completed on a continuing basis; or
   - 3.3. Commencement or completion of the work authorized by the permit is delayed by litigation, appeals, strikes or other extraordinary circumstances related to the work authorized by the permit beyond the permit holder's control, subject to approval by the *building official;* and
4. If an application for renewal is submitted on or after January 1, 2017, the permit shall not be renewed unless: (a) the *building official* determines that the permit complies, or is modified to comply, with the Seattle Stormwater Code in effect on the date of application for renewal; or (b) construction has started. For purposes of this provision, "started construction" means the site work associated with and directly related to the *approved* project has begun. For example, grading the project site to final grade or utility installation constitutes the start of construction; simply clearing the project site does not.

R105.15 Reestablishment of expired permits. A new permit is required to complete work if a permit has expired and was not renewed.

DRAFT

Exception: A permit that expired less than one year prior to the date of a request for reestablishment may be reestablished upon approval of the *building official* if it complies with Section R105.14, Items 2, 3 and 4 above. Once re-established the permit will not be considered to have expired. The new expiration date of a reestablished permit shall be determined in accordance with Section R105.13.

R105.16 Revocation of building permits. Whenever the *building official* determines there are grounds for revoking a permit, the *building official* may issue a notice of revocation. The notice of revocation shall identify the reason for the proposed revocation, including but not limited to the violations, the conditions violated and any alleged false or misleading information provided.

R105.16.1 Standards for revocation. The *building official* may revoke a permit if:

1. The code or the building permit has been or is being violated and issuance of a notice of violation or stop work order has been or would be ineffective to secure compliance because of circumstances related to the violation; or
2. The permit was obtained with false or misleading information.

R105.16.2 Service of notice of revocation. The notice of revocation shall be served upon the owner, agent or other responsible person by personal service or regular first class mail addressed to the last known address of such person or if no address is available after reasonable inquiry, the notice may be posted in a conspicuous place on the premises. The notice may also be posted if served by personal service or first class mail.

R105.16.3 Effective date of revocation. The *building official* shall identify in the notice of revocation a date certain on which the revocation will take effect. This date may be stayed pending complete review by the *building official* pursuant to Section R105.12.4.

R105.16.4 Review by the building official for notice of revocation. Any person aggrieved by a notice of revocation may obtain a review by making a request in writing to the *building official* within three business days of the date of service of the notice of revocation. Any person affected by the notice of revocation may submit additional information to the *building official* for consideration as part of the review at any time prior to the review.

R105.16.4.1 Review procedure. The review will be made by a representative of the *building official* who will review all additional information received and may also request a site visit. After the review, the *building official* may:

1. Sustain the notice of revocation and affirm or modify the date the revocation will take effect;
2. Withdraw the notice of revocation;
3. Modify the notice of revocation and affirm or modify the date the revocation will take effect; or
4. Continue the review to a date certain.

R105.16.4.2 Order of revocation of permit. The *building official* shall issue an order containing the decision within ten days after the review is completed and shall cause the same to be sent by regular first class mail to the person or persons requesting the review, any other person on whom the notice of revocation was served and any other person who requested a copy before issuance of the order. The order of the *building official* is the final order of the City, and the City and all parties shall be bound by the order.

DRAFT

SECTION R106
INSPECTIONS

R106.1 General. All construction or work for which a permit is required is subject to inspection by the *building official*, and certain types of construction shall have special inspections by registered special inspectors as specified in the *Seattle Building Code* Chapter 17.

R106.2 Surveys. A survey of the *lot* may be required by the *building official* to verify compliance of the structure with *approved construction documents.*

R106.3 Inspection requests. The owner of the property or the owner's authorized agent, or the person designated by the owner or agent to do the work authorized by a permit shall notify the *building official* that work requiring inspection as specified in this section is ready for inspection.

R106.4 Access for inspection. The permit holder and the person requesting any inspections required by this code shall provide access to and means for proper inspection of such work, including safety *equipment* required by the Washington Industrial Safety and Health Agency. The work shall remain accessible and exposed for inspection purposes until *approved* by the *building official*. Neither the *building official* nor the City is liable for expense entailed in the required removal or replacement of any material to allow inspection.

R106.5 Inspection record. Work requiring a permit shall not be commenced until the permit holder or the permit holder's agent has posted an inspection record in a conspicuous place on the premises and in a position that allows the *building official* to con-

veniently make the required entries regarding inspection of the work. This record shall be maintained in such a position by the permit holder or the permit holder's agent until final approval has been granted by the *building official.*

R106.6 Approvals required. No work shall be done on any part of the building or structure beyond the point indicated in each successive inspection without first obtaining the written approval of the *building official.* Written approval shall be given only after an inspection has been made of each successive step in the construction as indicated by each of the inspections required in Section R106.8. There shall be a final inspection and approval of all buildings when they are completed and ready for occupancy.

R106.6.1 Effect of approval. Approval as a result of an inspection is not approval of any violation of the provisions of this code or of other pertinent laws and ordinances of the City. Inspections presuming to give authority to violate or cancel the provisions of this code or of other pertinent laws and ordinances of the City are not valid.

R106.7 Concealment of work. No required reinforcing steel or structural framework of any part of a building or structure shall be covered or concealed in any manner whatsoever without first obtaining the approval of the *building official.*

Exception: Modular homes and commercial coaches identified by State of Washington stickers specified in Section 106.13.4 of the *International Building Code* and placed upon a permanent foundation *approved* and inspected by the *building official.*

R106.8 Required inspections. The *building official,* upon notification by the permit holder or the permit holder's agent, of the property address and permit number, shall make the following inspections and shall either approve that portion of the construction as completed or shall notify the permit holder or the permit holder's agent if the construction fails to comply with the law.

R106.8.1 First ground disturbance inspection. To be made prior to beginning land-disturbing activity, and following installation of erosion control measures and any required fencing that may restrict land disturbance in steep slope or other buffers as defined in chapter 25.09 of the *Seattle Municipal Code.*

Note: The purpose of the site inspection is to verify the erosion control method, location and proper installation. *Approved* drainage plan requirements and site plan conditions will also be verified, including buffer delineations.

R106.8.2 Foundation inspection. To be made after trenches are excavated and forms erected and when all materials for the foundation are delivered on the job. Where concrete from a central mixing plant (commonly termed "ready mix") is to be used, materials need not be on the job.

R106.8.3 Concrete slab or under-floor inspection. To be made after all in-slab or under-floor building service *equipment,* conduit, *piping* accessories and other ancillary *equipment* items are in place but before any concrete is poured or floor sheathing installed, including the subfloor.

R106.8.4 Floodplain inspections. For construction in flood hazard areas identified in Table R301.2(1), upon placement of the lowest floor, including *basement,* and prior to further vertical construction, the applicant shall submit documentation, prepared and sealed by a registered *design professional,* showing the elevation of the lowest floor, including *basement,* as required in Section R322.

R106.8.5 Frame inspection. To be made after the roof, all framing, fireblocking and bracing are in place and all pipes, chimneys and vents are complete and the rough electrical, plumbing and heating wires, pipes and ducts are *approved.*

R106.8.6 Insulation inspection. To be made after all insulation and vapor barriers are in place but before any gypsum board or plaster is applied.

R106.8.7 Lath and/or gypsum board inspection. For shear walls, to be made after lathing and/or gypsum board, interior and exterior, is in place, but before any plastering is applied or before gypsum board joints and fasteners are taped and finished.

R106.8.8 Final site inspection. To be made after all grading is complete, and all permanent erosion controls, stormwater facilities and stormwater best management practices have been installed.

Exception: A final site inspection is not required for projects with less than 750 square feet of land disturbing activity.

R106.8.9 Final inspection. To be made after finish grading and the building is completed and before occupancy.

R106.8.9.1 Elevation documentation. If located in a flood hazard area, the documentation of elevations required in Section R322.1.10 shall be submitted to the *building official* prior to the final inspection.

R106.9 Special inspection. Special inspection shall be provided in accordance with *International Building Code* Chapter 17.

R106.10 Other inspections. In addition to the inspections specified above, the *building official* may make or require any other inspections of any construction work or site work to ascertain compliance with the provisions of this code and other pertinent laws and ordinances that are enforced by the *building official.*

R106.11 Special investigation. If work that requires a permit or approval is commenced or performed prior to making formal application and receiving the *building official's* permission to proceed, the *building official* may make a special investigation

DRAFT

inspection before a permit is issued for such work. Where a special investigation is made, a special investigation fee may be assessed in accordance with the Fee Subtitle.

R106.12 Reinspections. The *building official* may require a reinspection if work for which an inspection is called is not complete, required corrections are not made, the inspection record is not properly posted on the work site, the *approved* plans are not readily available to the inspector, access is not provided on the date for which inspection is requested, or if deviations from *construction documents* that require the approval of the *building official* have been made without proper approval, or as otherwise required by the *building official.*

R106.12.1 Compliance with Section R107.3. For the purpose of determining compliance with Section R107.3, Maintenance, the *building official* or the fire chief may cause a structure to be reinspected.

R106.12.2 Reinspection fee. The *building official* may assess a reinspection fee as set forth in the Fee Subtitle for any action for which reinspection is required. In instances where reinspection fees have been assessed, no additional inspection of the work will be performed until the required fees have been paid.

R106.13 Approval for occupancy. Except for *alterations* and additions, no building or structure subject to this code shall be occupied until *approved* for occupancy after final inspection.

R106.13.1 Effect of Final inspection. Final inspection is not an approval of any violation of the provisions of this code or other pertinent laws and ordinances of the City. Certificates presuming to give authority to violate or cancel the provisions of this code or of other pertinent laws and ordinances of the City are not valid.

SECTION R107
EXISTING STRUCTURES AND EQUIPMENT

DRAFT

R107.1 General. Buildings in existence at the time of the passage of this code that were legally constructed and occupied in accordance with the provisions of a prior code may continue their existing use, if such use is not unsafe. Mechanical systems lawful at the time of the adoption of this code may continue and may be maintained or repaired, converted to another type of fuel or have components replaced if it is done in accordance with the basic original design and location and no hazard to life, health or property is created by such mechanical system.

R107.2 Establishing existing uses for the record. In order to establish an existing use for the record, the building shall comply with the fire and life safety requirements of this code or the code effective at the time the building was constructed. If the existing use is other than that for which the building was constructed, the building shall comply with this code or the code effective at the time the existing use was legally established.

R107.3 Maintenance. All buildings and structures, and all parts thereof, shall be maintained in a safe and sanitary condition. All mechanical systems, materials, *equipment* and appurtenances and all parts thereof shall be maintained in proper operating condition in accordance with the original design and in a safe and hazard-free condition. All devices and safeguards which are or were required by a code in effect when the building or structure was erected, altered or repaired shall be maintained in conformance with the code edition under which installed.

Exception: The *building official* is authorized to modify the requirements of this subsection where all or a portion of a building is unoccupied, closed off and reasonably secure from unlawful entry.

R107.3.1 Reinspection for maintenance. To determine compliance with this subsection, the *building official* may cause a mechanical system or *equipment* to be reinspected.

R107.3.2 Responsibility for maintenance. The owner or the owner's designated agent is responsible for maintenance of buildings, structures, mechanical systems, materials, *equipment*, devices, safeguards and appurtenances. It is a violation to fail to maintain such buildings, structures, mechanical systems, materials, *equipment*, devices, safeguards and appurtenances or to fail to immediately comply with any lawful notice or order of the *building official.*

Exception: Occupants of dwellings are responsible for the maintenance of smoke alarms required by Section R314 and carbon monoxide alarms required by Section R315.

R107.4 Unsafe building appendages. Parapet walls, cornices, chimneys and other appendages or structural members that are supported by, attached to, or a part of a building and that are in a deteriorated condition or are otherwise unable to sustain the design loads specified in this code, are hereby designated as unsafe building appendages. All such unsafe building appendages are public nuisances and shall be abated in accordance with Section R102.

R107.5 Additions and alterations. Buildings and structures to which additions and *alterations* are made shall comply with all the requirements of this code for new facilities except as specifically provided in this section. *Alterations* shall be such that the *existing building* or structure is no less conforming to the provisions of this code after the *alteration* than the *existing building* or structure was before the *alteration*.

See also applicable provisions of the *International Energy Conservation Code*. Any building or addition that is not covered by or within the scope of this code as provided in Section R101.2 shall be designed to the provisions of the *International Building Code*.

Exceptions:

1. An addition may be made to an existing nonconforming building if the following conditions are met:
   1.1. A fire wall, constructed in compliance with *International Building Code* Section 706, separates the addition and the existing structure;
   1.2. The existing building is not made more nonconforming; and
   1.3. The addition conforms to this code.
2. Additions with less than 500 square feet of conditioned floor area are exempt from the requirements for whole house ventilation systems, Section M1507.

R107.5.1 When allowed. Additions and *alterations* may be made to any existing building or structure without requiring the existing building or structure to comply with all the requirements of this code, if the addition or *alteration* conforms to the standards required for a new building or structure and complies with Section R107.5. Additions, *alterations* or renovations may be made to any mechanical system without requiring the existing mechanical system to comply with all the requirements of this code, if the addition, *alteration* or renovation conforms to the standards required for a new mechanical system. Additions, *alterations* or renovations shall not cause an existing system to become unsafe, unhealthy or overloaded. Minor additions, *alterations* and renovations to existing mechanical systems may be installed in accordance with the law in effect at the time the original installation was made, if *approved* by the *building official.*

R107.5.2 Impracticality. In cases where compliance with the requirements of this code is impractical, the applicant may arrange a presubmittal conference with the design team and the *building official.* The applicant shall identify alternate design solutions and modifications and demonstrate conformance to Section R104.4 or R104.5. The *building official* is authorized to waive specific requirements in this code that the *building official* determines to be impractical.

R107.5.3 Compliance with retroactive ordinances. *Alterations* and repairs to existing buildings that are being made in response to a notice or order requiring compliance with the *Housing and Building Maintenance Code*, Subtitle II, Title 22 of the *Seattle Municipal Code*, the *Fire Code*, Subtitle VI, Title 22 of the *Seattle Municipal Code*, or other ordinances applicable to existing buildings, shall be permitted to be made in accordance with the standards contained in those ordinances rather than the standards for new buildings contained in this code. If standards are not specified in those ordinances, such *alterations* or repairs shall conform to the requirements of this chapter.

R107.5.4 Nonstructural alterations. *Alterations* that are nonstructural and that do not affect any member or part of the building or structure required to be fire resistant may be made with the same materials of which the building or structure is constructed, provided that no change is permitted that increases its hazard.

R107.5.5 Maintenance of structural stability. If *approved* by the *building official*, minor structural *alterations* necessary to maintain the structural stability of the building may be made with the same material of which the building or structure is constructed.

R107.6 Repairs. Repairs to existing structures or *equipment* shall comply with the International Existing Buildings Code.

Exception: *Repair* of buildings with *damage ratios* of 60 percent or more shall comply with Section R107.9.

R107.7 Landmarks—Historic buildings and structures. The *building official* may modify the specific requirements of this code as it applies to landmarks, and require in lieu thereof alternate requirements that, in the opinion of the *building official*, will result in a reasonable degree of safety to the public and the occupants of those buildings.

Exception: *Repair* of buildings with *damage ratios* of 60 percent or more shall comply with Section R107.9.

R107.8 Unreinforced masonry chimneys. If an unreinforced *masonry chimney* is altered or if the building in which such a chimney is located undergoes substantial *alteration* as defined in Section R107.9.1, the chimney shall be altered to conform to rules promulgated by the *building official.*

R107.9 Substantial alterations or repairs. Any building or structure to which substantial *alterations* or repairs are made shall conform to the requirements of this Section and Sections R310 (emergency escape and rescue openings), R311 (means of egress), R314 (smoke alarms), R315 (carbon monoxide alarms) and R302.2 through R302.4 (*dwelling unit* separation).

R107.9.1 Definition. For the purpose of this section, substantial *alterations* or repairs may mean any one of the following, as determined by the *building official:*

1. Repair of buildings with *damage ratios* of 60 percent or more.
2. Remodeling or additions that substantially extend the useful physical and/or economic life of the building or a significant portion of the building.
3. Change to a use within the scope of this code from a use not within the scope of this code.

DRAFT

4. Change from an *accessory structure* to any other use within the scope of this code.
5. Change from a detached one- or two-family dwelling to a townhouse.
6. Change to *adult family home* or family child day care home from any other use.

R107.9.2 Seismic regulations. Buildings or structures to which substantial *alterations* or repairs are made shall comply with Sections R301.1.3 or Sections R403.1.6, R602.10 and R602.11. In addition, the *building official* may require testing of existing materials, at applicant or property owner's expense, if there is insufficient evidence of structural strength or integrity of the building or structure.

Exception: In lieu of compliance with the seismic provisions of Sections R403.1.6, R602.10 and R602.11, if *approved* by the *building official*, the applicant may evaluate and strengthen portions of the building lateral support structure, such as foundations and cripple walls.

R107.9.3 Other structural work. All other structural work shall comply with the requirements of Chapters 3, 4, 5, 6, 8 and 10 of this code.

R107.10 Change of use. If the use of a building or portion thereof is changed, any elements of the *dwelling unit* envelope that are altered shall comply with the sound transmission control requirements of Section R331. If the use of a building or portion thereof is changed to *adult family home* or to *family home child care*, the building shall comply with the applicable provisions of Section R327 or R328.

R107.11 Moved buildings. Residential buildings or structures moved into or within the City are not required to comply with the requirements of this code if the original use classification of the building or structure is not changed. Compliance with the requirements of this chapter is required if the moved residential buildings or structures undergo substantial *alteration* as defined in R107.9.1. Work performed on new and existing foundations shall comply with all of the requirements of this code for new construction.

R107.12 Rat abatement for demolished buildings. All applicants for a demolition permit shall initiate a rat abatement program on the project site at least 15 days prior to the start of demolition or any clearing or grading activity on the demolition site.

R107.12.1 Duration of rat abatement program. The rat abatement program must continue at least until demolition begins. No demolition or clearing or grading on the demolition site shall begin until the rat abatement program is complete unless approved by the *building official*. The rat abatement program may be terminated or waived by the building official when supported by a written recommendation of a licensed pest control agent.

R107.12.2 Requirements of rat abatement program. The rat abatement program shall be approved by a qualified pest control agent and shall comply with the Seattle-King County Public Health Department guidelines and recommendations for rat baiting. The use of any pesticide shall comply with WAC 16-228-1380. The *building official* may require additional deterrent measures on recommendation of the Seattle-King County Public Health Department.

107.12.3 Demolition permit. The *building official* shall not issue any demolition permit until the applicant has provided a copy of the rat abatement program and a declaration that the requirements of Section R107.12 have been or will be complied with prior to the start of demolition.

DRAFT

SECTION R108
FEES

R108.1 Fees. A fee for each permit and for other activities related to the enforcement of this code shall be paid as set forth in the Fee Subtitle.

SECTION R109
INTERPRETATION

R109.1 Defined terms. Selected words and terms defined in Chapter 2 are italicized where they appear in code text. Defined terms added or amended by The City of Seattle may also appear in italics. When defined terms are not italicized, consider the context to judge applicability of the definition in Chapter 2.

DRAFT

Part II—Definitions

CHAPTER 2

DEFINITIONS

User notes:

About this chapter: *Codes, by their very nature, are technical documents. Every word, term and punctuation mark can add to or change the meaning of a technical requirement. It is necessary to maintain a consensus on the specific meaning of each term contained in the code. Chapter 2 performs this function by stating clearly what specific terms mean for the purpose of the code.*

Code development reminder: *Code change proposals to definitions in this chapter preceded by a bracketed letter are considered by the IRC—Building Code Development Committee [RB], the IRC—Mechanical/Plumbing Code Development Committee [MP] or the IECC—Residential Code Development Committee [RE] during the Group B (2019) Code Development cycle. See page iv for explanation.*

DRAFT

SECTION R201
GENERAL

R201.1 Scope. Unless otherwise expressly stated, the following words and terms shall, for the purposes of this code, have the meanings indicated in this chapter.

R201.2 Interchangeability. Words used in the present tense include the future; words in the masculine gender include the feminine and neuter; the singular number includes the plural and the plural, the singular.

R201.3 Terms defined in other codes. Where terms are not defined in this code such terms shall have the meanings ascribed in other code publications of the International Code Council.

R201.4 Terms not defined. Where terms are not defined through the methods authorized by this section, such terms shall have ordinarily accepted meanings such as the context implies.

[S] R201.5 References to other codes. Whenever an International, National or Uniform Code is referenced in this code, it shall mean the Seattle edition of that code, including any local amendments. References to the "Building Code," "Fire Code," "Mechanical Code" and "Plumbing Code" mean the Seattle editions of those codes.

SECTION R202
DEFINITIONS

[S][RE] ABOVE-GRADE WALL. For the definition applicable ((~~in Chapter 11~~)) to the *Seattle Residential Energy Code*, see ((~~Section N1101.6~~)) Section R202 in the residential section of the *Seattle Energy Code*.

[RB] ACCESS (TO). That which enables a device, an appliance or equipment to be reached by ready access or by a means that first requires the removal or movement of a panel, door or similar obstruction.

[S][RE] ACCESSIBLE. For the definition applicable ((~~in Chapter 11~~)) to the *Seattle Residential Energy Code*, see ((~~Section N1101.6~~)) Section R202 in the residential section of the *Seattle Energy Code*.

[RB] ACCESSORY STRUCTURE. A structure that is accessory to and incidental to that of the *dwelling*(*s*) and that is located on the same *lot*.

[S][RB] ADDITION. An extension or increase in floor area, number of stories or height of a building or structure. For the definition applicable ((~~in Chapter 11~~)) to the *Seattle Residential Energy Code*, see ((~~Section N1101.6~~)) Section R202 in the residential section of the *Seattle Energy Code*.

[RB] ADHERED STONE OR MASONRY VENEER. Stone or masonry veneer secured and supported through the adhesion of an *approved* bonding material applied to an *approved* backing.

[W] ADULT FAMILY HOME. A dwelling in which a person or persons provide personal care, special care, room and board to more than one but not more than six adults who are not related by blood or marriage to the person or persons providing the services.

[MP] AIR ADMITTANCE VALVE. A one-way valve designed to allow air into the plumbing drainage system where a negative pressure develops in the piping. This device shall close by gravity and seal the terminal under conditions of zero differential pressure (no flow conditions) and under positive internal pressure.

[S][RE] AIR BARRIER. For the definition applicable ((~~in Chapter 11~~)) to the *Seattle Residential Energy Code*, see ((~~Section N1101.6~~)) Section R202 in the residential section of the *Seattle Energy Code*.

[MP] AIR BREAK (DRAINAGE SYSTEM). An arrangement where a discharge pipe from a fixture, *appliance* or device drains indirectly into a receptor below the flood-level rim of the receptor and above the trap seal.

[MP] AIR CIRCULATION, FORCED. A means of providing space conditioning utilizing movement of air through ducts or plenums by mechanical means.

[MP] AIR-CONDITIONING SYSTEM. A system that consists of heat exchangers, blowers, filters, supply, exhaust and return-air systems, and shall include any apparatus installed in connection therewith.

[MP] AIR GAP, DRAINAGE SYSTEM. The unobstructed vertical distance through free atmosphere between the outlet of a waste pipe and the flood-level rim of the fixture or receptor into which it is discharging.

[MP] AIR GAP, WATER-DISTRIBUTION SYSTEM. The unobstructed vertical distance through free atmosphere between the lowest opening from a water supply discharge to the flood-level rim of a plumbing fixture.

[S][RB] AIR-IMPERMEABLE INSULATION. An insulation having an air permanence equal to or less than 0.02 L/s-m^2 at 75 Pa pressure differential as tested in accordance with ASTM E2178 or E283. For the definition applicable ((~~in Chapter 11~~)) to the *Seattle Residential Energy Code*, see ((~~Section N1101.6~~)) Section R202 in the residential section of the *Seattle Energy Code*.

[S][RB] ALTERATION. Any construction, retrofit or renovation to an existing structure other than repair or addition that requires a permit. Also, a change in a building, electrical, gas, mechanical or plumbing system that involves an extension, addition or change to the arrangement, type or purpose of the original installation that requires a permit. For the definition applicable ((~~in Chapter 11~~)) to the *Seattle Residential Energy Code*, see ((~~Section N1101.6~~)) Section R202 in the residential section of the *Seattle Energy Code*.

[RB] ALTERNATING TREAD DEVICE. A device that has a series of steps between 50 and 70 degrees (0.87 and 1.22 rad) from horizontal, usually attached to a center support rail in an alternating manner so that the user does not have both feet on the same level at the same time.

[RB] ANCHORED STONE OR MASONRY VENEER. Stone or masonry veneer secured with *approved* mechanical fasteners to an *approved* backing.

[MP] ANCHORS. See "Supports."

[MP] ANTISIPHON. A term applied to valves or mechanical devices that eliminate siphonage.

[MP] APPLIANCE. A device or apparatus that is manufactured and designed to utilize energy and for which this code provides specific requirements.

[RB] APPROVED. Acceptable to the *building official*.

[S][RB] APPROVED AGENCY. An established and recognized agency that is regularly engaged in conducting tests, furnishing inspection services or furnishing product certification, and has been *approved* by the building official. For the definition applicable ((~~in Chapter 11~~)) to the *Seattle Residential Energy Code*, see ((~~Section N1101.6~~)) Section R202 in the residential section of the *Seattle Energy Code*.

[MP] APPROVED SOURCE. An independent person, firm or corporation, *approved* by the *building official*, who is competent and experienced in the application of engineering principles to materials, methods or systems analyses.

[RB] ASPECT RATIO. The ratio of longest to shortest perpendicular dimensions, or for wall sections, the ratio of height to length.

[RB] ATTIC. The unfinished space between the ceiling assembly and the roof assembly.

[**RB] ATTIC, HABITABLE.** A finished or unfinished *habitable space* within an *attic*.

[S][RE] AUTOMATIC. For the definition applicable ((~~in Chapter 11~~)) to the *Seattle Residential Energy Code*, see ((~~Section N1101.6~~)) Section R202 in the residential section of the *Seattle Energy Code*.

[MP] BACKFLOW, DRAINAGE. A reversal of flow in the drainage system.

[MP] BACKFLOW PREVENTER. A backflow prevention assembly, a backflow prevention device or other means or method to prevent backflow into the potable water supply.

[MP] BACKFLOW PREVENTER, REDUCED-PRESSURE-ZONE TYPE. A backflow-prevention device consisting of two independently acting check valves, internally force loaded to a normally closed position and separated by an intermediate chamber (or zone) in which there is an automatic relief means of venting to atmosphere internally loaded to a normally open

DRAFT

position between two tightly closing shutoff valves and with means for testing for tightness of the checks and opening of relief means.

[MP] BACKFLOW, WATER DISTRIBUTION. The flow of water or other liquids into the potable water-supply piping from any sources other than its intended source. Backsiphonage is one type of backflow.

[MP] BACKPRESSURE. Pressure created by any means in the water distribution system that by being in excess of the pressure in the water supply mains causes a potential backflow condition.

[MP] BACKPRESSURE, LOW HEAD. A pressure less than or equal to 4.33 psi (29.88 kPa) or the pressure exerted by a 10-foot (3048 mm) column of water.

[MP] BACKSIPHONAGE. The flowing back of used or contaminated water from piping into a potable water-supply pipe due to a negative pressure in such pipe.

[MP] BACKWATER VALVE. A device installed in a drain or pipe to prevent backflow of sewage.

[W] BALANCED WHOLE HOUSE VENTILATION. Balanced whole house ventilation is defined as any combination of concurrently operating residential unit mechanical exhaust and mechanical supply whereby the total mechanical exhaust airflow rate is within 10 percent or 5 cfm, whichever is greater, of the total mechanical supply airflow rate. Intermittent dryer exhaust, intermittent range hood exhaust, and intermittent toilet room exhaust airflow rates above the residential dwelling or sleeping unit minimum ventilation rate are exempt from the balanced airflow calculation.

[RB] BASEMENT. A *story* that is not a *story above grade plane*. (see "Story above grade plane").

[S][RE] BASEMENT WALL. For the definition applicable ((~~in Chapter 11~~)) to the *Seattle Residential Energy Code*, see ((~~Section N1101.6~~)) Section R202 in the residential section of the *Seattle Energy Code*.

[RB] BASIC WIND SPEED. Three-second gust speed at 33 feet (10 058 mm) above the ground in Exposure C (see Section R301.2.1) as given in Figure R301.2(5)A.

[MP] BATHROOM GROUP. A group of fixtures, including or excluding a bidet, consisting of a water closet, lavatory, and bathtub or shower. Such fixtures are located together on the same floor level.

[W] ((~~[RB] BATTERY SYSTEM, STATIONARY STORAGE.~~ ~~A rechargeable energy storage system consisting of electrochemical storage batteries, battery chargers, controls and associated electrical *equipment* designed to provide electrical power to a building. The system is typically used to provide standby or emergency power, an uninterruptable power supply, load shedding, load sharing or similar capabilities.~~))

[MP] BEND. A drainage fitting, designed to provide a change in direction of a drain pipe of less than the angle specified by the amount necessary to establish the desired slope of the line (see "Elbow" and "Sweep").

[S][MP] BOILER. ((~~A self-contained *appliance* from which hot water is circulated for heating purposes and then returned to the boiler, and that operates at water pressures not exceeding 160 pounds per square inch gage (psig) (1102 kPa gauge) and at water temperatures not exceeding 250°F (121°C).~~)) A closed vessel in which water is heated, steam is generated, steam is superheated, or any combination thereof, under pressure or vacuum by the direct application of heat. The term "boiler" shall also include fired units for heating or vaporizing liquids other than water where these systems are complete within themselves.

[RB] BOND BEAM. A horizontal grouted element within masonry in which reinforcement is embedded.

[RB] BRACED WALL LINE. A straight line through the building plan that represents the location of the lateral resistance provided by the wall bracing.

[RB] BRACED WALL LINE, CONTINUOUSLY SHEATHED. A *braced wall line* with structural sheathing applied to all sheathable surfaces including the areas above and below openings.

[RB] BRACED WALL PANEL. A full-height section of wall constructed to resist in-plane shear loads through interaction of framing members, sheathing material and anchors. The panel's length meets the requirements of its particular bracing method, and contributes toward the total amount of bracing required along its *braced wall line* in accordance with Section R602.10.1.

[MP] BRANCH. Any part of the piping system other than a riser, main or stack.

[MP] BRANCH, FIXTURE. See "Fixture branch, drainage."

[MP] BRANCH, HORIZONTAL. See "Horizontal branch, drainage."

[MP] BRANCH INTERVAL. A vertical measurement of distance, 8 feet (2438 mm) or more in *developed length*, between the connections of horizontal branches to a drainage stack. Measurements are taken down the stack from the highest horizontal branch connection.

[MP] BRANCH, MAIN. A water-distribution pipe that extends horizontally off a main or riser to convey water to branches or fixture groups.

[MP] BRANCH, VENT. A vent connecting two or more individual vents with a vent stack or stack vent.

DRAFT

[MP] BTU/H. The *listed* maximum capacity of an *appliance*, absorption unit or burner expressed in British thermal units input per hour.

[W][S][RB] BUILDING. Any one- or two-family dwelling or townhouse, or portion thereof, ((~~including *townhouses*,~~)) used or intended to be used for human habitation, for living, sleeping, cooking or eating purposes, or any combination thereof, or any *accessory structure*. For the definition applicable ((~~in Chapter 11~~)) to the *Seattle Residential Energy Code*, see ((~~Section N1101.6~~)) Section R202 in the residential section of the *Seattle Energy Code*.

[MP] BUILDING DRAIN. The lowest piping that collects the discharge from all other drainage piping inside the house and extends 30 inches (762 mm) in *developed length* of pipe, beyond the *exterior walls* and conveys the drainage to the *building sewer*.

[S][RB] BUILDING, EXISTING. ((~~Existing building is a~~)) A building erected prior to the adoption of this code, or one ((~~for which a legal building *permit* has been issued~~)) that has passed a final inspection.

[RB] BUILDING-INTEGRATED PHOTOVOLTAIC PRODUCT. A building product that incorporates photovoltaic modules and functions as a component of the building envelope.

[RB] BUILDING-INTEGRATED PHOTOVOLTAIC ROOF PANEL (BIPV Roof Panel). A *photovoltaic panel* that functions as a component of the building envelope.

[RB] BUILDING LINE. The line established by law, beyond which a building shall not extend, except as specifically provided by law.

[S][RB] BUILDING OFFICIAL. The ((~~officer or other designated authority charged with the administration and enforcement of this code~~)) Director of the Seattle Department of Construction and Inspections. For the definition applicable ((~~in Chapter 11~~)) to the *Seattle Residential Energy Code*, see ((~~Section N1101.6~~)) Section R202 in the residential section of the *Seattle Energy Code*.

[MP] BUILDING SEWER. That part of the drainage system that extends from the end of the *building drain* and conveys its discharge to a public sewer, private sewer, individual sewage-disposal system or other point of disposal.

[S][RE] BUILDING SITE. For the definition applicable ((~~in Chapter 11~~)) to the *Seattle Residential Energy Code*, see ((~~Section N1101.6~~)) Section R202 in the residential section of the *Seattle Energy Code*.

[S][RE] BUILDING THERMAL ENVELOPE. For the definition applicable ((~~in Chapter 11~~)) to the *Seattle Residential Energy Code*, see ((~~Section N1101.6~~)) Section R202 in the residential section of the *Seattle Energy Code*.

[RB] BUILT-UP ROOF COVERING. Two or more layers of felt cemented together and surfaced with a cap sheet, mineral aggregate, smooth coating or similar surfacing material.

[RB] CAP PLATE. The top plate of the double top plates used in structural insulated panel (SIP) construction. The cap plate is cut to match the panel thickness such that it overlaps the wood structural panel facing on both sides.

[RB] CARBON MONOXIDE ALARM. A single- or multiple-station alarm intended to detect carbon monoxide gas and alert occupants by a distinct audible signal. It incorporates a sensor, control components and an alarm notification appliance in a single unit.

[RB] CARBON MONOXIDE DETECTOR. A device with an integral sensor to detect carbon monoxide gas and transmit an alarm signal to a connected alarm control unit.

[RB] CEILING HEIGHT. The clear vertical distance from the finished floor to the finished ceiling.

[RB] CEMENT PLASTER. A mixture of Portland or blended cement, Portland cement or blended cement and hydrated lime, masonry cement or plastic cement and aggregate and other *approved* materials as specified in this code.

[RB] CHANGE OF OCCUPANCY. A change in the use of a building or portion of a building that involves a change in the application of the requirements of this code.

[W] CHILD CARE, FAMILY HOME. A child care facility, licensed by Washington state, located in the dwelling of the person or persons under whose direct care and supervision the child is placed, for the care of twelve or fewer children, including children who reside at the home.

[W] CHILD DAY CARE. The care of children during any period of a 24 hour day.

[MP] CHIMNEY. A primary vertical structure containing one or more flues, for the purpose of carrying gaseous products of combustion and air from a fuel-burning *appliance* to the outside atmosphere.

[MP] CHIMNEY CONNECTOR. A pipe that connects a fuel-burning *appliance* to a chimney.

[MP] CHIMNEY TYPES.

Residential-type appliance. An *approved* chimney for removing the products of combustion from fuel-burning, residential-type *appliances* producing combustion gases not in excess of 1,000°F (538°C) under normal operating conditions, and capable of producing combustion gases of 1,400°F (760°C) during intermittent forces firing for periods up to 1 hour. All tempera-

DRAFT

tures shall be measured at the *appliance* flue outlet. Residential-type *appliance* chimneys include masonry and factory-built types.

[MP] CIRCUIT VENT. A vent that connects to a horizontal drainage branch and vents two traps to not more than eight traps or trapped fixtures connected into a battery.

[S][MP] CIRCULATING HOT WATER SYSTEM. A specifically designed water distribution system where one or more pumps are operated in the service hot water piping to circulate heated water from the water-heating equipment to fixtures and back to the water-heating equipment. For the definition applicable ((~~in Chapter 11~~)) to the *Seattle Residential Energy Code*, see ((~~Section N1101.6~~)) Section R202 in the residential section of the *Seattle Energy Code*.

[RB] CLADDING. The exterior materials that cover the surface of the building envelope that is directly loaded by the wind.

[MP] CLEANOUT. An opening in the drainage system used for the removal of possible obstruction and located to allow for *access*.

[S][RE] CLIMATE ZONE. A geographical region based on climatic criteria as specified in this code. For the definition applicable ((~~in Chapter 11~~)) to the *Seattle Residential Energy Code*, see ((~~Section N1101.6~~)) Section R202 in the residential section of the *Seattle Energy Code*.

[RB] CLOSET. A small room or chamber used for storage.

[RB] COLLAPSIBLE SOILS. Soils that exhibit volumetric reduction in response to partial or full wetting under load.

[MP] COLLECTION PIPE. Unpressurized pipe used within the collection system that drains on-site nonpotable water or rainwater to a storage tank by gravity.

[MP] COMBINATION WASTE AND VENT SYSTEM. A specially designed system of waste piping embodying the horizontal wet venting of one or more sinks, lavatories or floor drains by means of a common waste and vent pipe adequately sized to provide free movement of air above the flow line of the drain.

[RB] COMBUSTIBLE MATERIAL. Any material not defined as noncombustible.

[MP] COMBUSTION AIR. The air provided to fuel-burning *equipment* including air for fuel combustion, draft hood dilution and ventilation of the *equipment* enclosure.

[MP] COMMON VENT. A single pipe venting two trap arms within the same *branch interval*, either back-to-back or one above the other.

[RB] COMPRESSIBLE SOILS. Soils that exhibit volumetric reduction in response to the application of load even in the absence of wetting or drying.

[MP] CONDENSATE. The liquid that separates from a gas due to a reduction in temperature; for example, water that condenses from flue gases and water that condenses from air circulating through the cooling coil in air conditioning *equipment*.

[MP] CONDENSING APPLIANCE. An *appliance* that condenses water generated by the burning of fuels.

[RB] CONDITIONED AIR. Air treated to control its temperature, relative humidity or quality.

[S][RE] CONDITIONED FLOOR AREA. For the definition applicable ((~~in Chapter 11~~)) to the *Seattle Residential Energy Code*, see ((~~Section N1101.6~~)) Section R202 in the residential section of the *Seattle Energy Code*.

[W][RE] CONDITIONED SPACE. ((~~For the definition applicable in Chapter 11, see Section N1101.6.~~)) An area, room or space that is enclosed within the *building thermal envelope* and that is directly or indirectly heated or cooled. Spaces are indirectly heated or cooled where they communicate through openings with *conditioned spaces*, where they are separated from *conditioned spaces* by uninsulated walls, floors or ceilings, or where they contain uninsulated ducts, *piping* or other sources of heating or cooling. For the definition applicable to the *Seattle Residential Energy Code*, see Section R202 in the residential section of the *Seattle Energy Code.*

[RB] CONSTRUCTION DOCUMENTS. Written, graphic and pictorial documents prepared or assembled for describing the design, location and physical characteristics of the elements of a project necessary for obtaining a building *permit*. Construction drawings shall be drawn to an appropriate scale.

[MP] CONTAMINATION. A high-hazard or health-hazard impairment of the quality of the potable water that creates an actual hazard to the public health through poisoning or through the spread of disease by sewage, industrial fluids or waste.

[S][RE] CONTINUOUS AIR BARRIER. For the definition applicable ((~~in Chapter 11~~)) to the *Seattle Residential Energy Code*, see ((~~Section N1101.6~~)) Section R202 in the residential section of the *Seattle Energy Code*.

[S][RE] CONTINUOUS INSULATION (ci). For the definition applicable ((~~in Chapter 11~~)) to the *Seattle Residential Energy Code*, see ((~~Section N1101.6~~)) Section R202 in the residential section of the *Seattle Energy Code*.

[MP] CONTINUOUS WASTE. A drain from two or more similar adjacent fixtures connected to a single trap.

[MP] CONTROL, LIMIT. An automatic control responsive to changes in liquid flow or level, pressure, or temperature for limiting the operation of an *appliance*.

DRAFT

[MP] CONTROL, PRIMARY SAFETY. A safety control responsive directly to flame properties that senses the presence or absence of flame and, in event of ignition failure or unintentional flame extinguishment, automatically causes shutdown of mechanical *equipment*.

[MP] CONVECTOR. A system incorporating a heating element in an enclosure in which air enters an opening below the heating element, is heated and leaves the enclosure through an opening located above the heating element.

[RB] CORE. The lightweight middle section of a structural insulated panel, composed of foam plastic insulation, that provides the link between the two facing shells.

[RB] CORROSION RESISTANCE. The ability of a material to withstand deterioration of its surface or its properties where exposed to its environment.

[RB] COURT. A space, open and unobstructed to the sky, located at or above *grade* level on a *lot* and bounded on three or more sides by walls or a building.

[RB] CRAWL SPACE. An underfloor space that is not a basement.

[S][RE] CRAWL SPACE WALL. For the definition applicable ((~~in Chapter 11~~)) to the *Seattle Residential Energy Code*, see ((~~Section N1101.6~~)) Section R202 in the residential section of the *Seattle Energy Code*.

[RB] CRIPPLE WALL. A framed wall extending from the top of the foundation to the underside of the floor framing of the first *story above grade plane*.

[MP] CROSS CONNECTION. Any connection between two otherwise separate piping systems that allows a flow from one system to the other.

[RB] CROSS-LAMINATED TIMBER. A prefabricated engineered wood product consisting of not less than three layers of solid-sawn lumber or *structural composite lumber* where the adjacent layers are cross-oriented and bonded with structural adhesive to form a solid wood element.

[S][RE] CURTAIN WALL. For the definition applicable ((~~in Chapter 11~~)) to the *Seattle Residential Energy Code*, see ((~~Section N1101.6~~)) Section R202 in the residential section of the *Seattle Energy Code*.

[RB] DALLE GLASS. A decorative composite glazing material made of individual pieces of glass that are embedded in a cast matrix of concrete or epoxy.

[S] DAMAGE RATIO. The ratio between the cost of work and the estimated replacement cost of the building, expressed as a percentage. The work includes repair of damage to structural and fire/life safety systems.

[MP] DAMPER, VOLUME. A device that will restrict, retard or direct the flow of air in any duct, or the products of combustion of heat-producing *equipment*, vent connector, vent or chimney.

[RB] DEAD LOADS. The weight of the materials of construction incorporated into the building, including but not limited to walls, floors, roofs, ceilings, stairways, built-in partitions, finishes, cladding, and other similarly incorporated architectural and structural items, and fixed service *equipment*.

[RB] DECORATIVE GLASS. A carved, leaded or Dalle glass or glazing material with a purpose that is decorative or artistic, not functional; with coloring, texture or other design qualities or components that cannot be removed without destroying the glazing material; and with a surface, or assembly into which it is incorporated, that is divided into segments.

[S][RE] DEMAND RECIRCULATION WATER SYSTEM. For the definition applicable ((~~in Chapter 11~~)) to the *Seattle Residential Energy Code*, see ((~~Section N1101.6~~)) Section R202 in the residential section of the *Seattle Energy Code*.

[MP] DESIGN PROFESSIONAL. See "*Registered design professional*."

[MP] DEVELOPED LENGTH. The length of a pipeline measured along the center line of the pipe and fittings.

[MP] DIAMETER. Unless specifically stated, the term "diameter" is the nominal diameter as designated by the *approved* material standard.

[RB] DIAPHRAGM. A horizontal or nearly horizontal system acting to transmit lateral forces to the vertical resisting elements. Where the term "*diaphragm*" is used, it includes horizontal bracing systems.

[MP] DILUTION AIR. Air that enters a draft hood or draft regulator and mixes with flue gases.

[MP] DIRECT SYSTEM. A solar thermal system in which the gas or liquid in the solar collector loop is not separated from the load.

[MP] DIRECT-VENT APPLIANCE. A fuel-burning *appliance* with a sealed combustion system that draws all air for combustion from the outside atmosphere and discharges all flue gases to the outside atmosphere.

[W] DISTRIBUTED WHOLE HOUSE VENTILATION. A whole house ventilation system shall be considered distributed when it supplies outdoor air directly (not transfer air) to each dwelling or sleeping unit habitable space (living room, den, office, interior adjoining spaces or bedroom), and exhausts air from all kitchens and bathrooms directly outside.

DRAFT

[MP] DRAFT. The pressure difference existing between the *appliance* or any component part and the atmosphere, that causes a continuous flow of air and products of combustion through the gas passages of the *appliance* to the atmosphere.

Induced draft. The pressure difference created by the action of a fan, blower or ejector, that is located between the *appliance* and the chimney or vent termination.

Natural draft. The pressure difference created by a vent or chimney because of its height, and the temperature difference between the flue gases and the atmosphere.

[MP] DRAFT HOOD. A device built into an *appliance*, or a part of the vent connector from an *appliance*, that is designed to provide for the ready escape of the flue gases from the *appliance* in the event of no draft, backdraft or stoppage beyond the draft hood; prevent a backdraft from entering the *appliance*; and neutralize the effect of stack action of the chimney or gas vent on the operation of the *appliance*.

[MP] DRAFT REGULATOR. A device that functions to maintain a desired draft in the *appliance* by automatically reducing the draft to the desired value.

[RB] DRAFT STOP. A material, device or construction installed to restrict the movement of air within open spaces of concealed areas of building components such as crawl spaces, floor-ceiling assemblies, roof-ceiling assemblies and *attics*.

[MP] DRAIN. Any pipe that carries soil and waterborne wastes in a building drainage system.

[MP] DRAIN-BACK SYSTEM. A solar thermal system in which the fluid in the solar collector loop is drained from the collector into a holding tank under prescribed circumstances.

[MP] DRAINAGE FITTING. A pipe fitting designed to provide connections in the drainage system that have provisions for establishing the desired slope in the system. These fittings are made from a variety of both metals and plastics. The methods of coupling provide for required slope in the system.

[S][RE] DUCT. For the definition applicable ((~~in Chapter 11~~)) to the *Seattle Residential Energy Code*, see ((~~Section N1101.6~~)) Section R202 in the residential section of the *Seattle Energy Code*.

[S][MP] DUCT SYSTEM. A continuous passageway for the transmission of air that, in addition to ducts, includes duct fittings, dampers, plenums, fans and accessory air-handling *equipment* and *appliances*.

For the definition applicable ((~~in Chapter 11~~)) to the *Seattle Residential Energy Code*, see ((~~Section N1101.6~~)) Section R202 in the residential section of the *Seattle Energy Code*.

[RB] DWELLING. Any building that contains one or two *dwelling units* used, intended, or designed to be built, used, rented, leased, let or hired out to be occupied, or that are occupied for living purposes.

[W][S][RB] DWELLING UNIT. A single unit providing complete independent living facilities for one or more persons, including permanent provisions for living, sleeping, eating, cooking and sanitation. Dwelling units may also include the following uses:

1. *Adult family homes*, foster family care homes and family day care homes licensed by the Washington State Department of Social and Health Services.
2. Offices, mercantile, food preparation for off-site consumption, personal care salons or similar uses which are conducted primarily by the occupants of the dwelling unit and are secondary to the use of the unit for dwelling purposes, and which do not exceed 500 square feet (46.4 m^2). For the definition applicable ((~~in Chapter 11~~)) to the *Seattle Residential Energy Code*, see ((~~Section N1101.6~~)) Section R202 in the residential section of the *Seattle Energy Code*.

[MP] DWV. Abbreviated term for drain, waste and vent piping as used in common plumbing practice.

[MP] EFFECTIVE OPENING. The minimum cross-sectional area at the point of water-supply discharge, measured or expressed in terms of diameter of a circle and if the opening is not circular, the diameter of a circle of equivalent cross-sectional area. (This is applicable to air gap.)

[W] EGRESS ROOF ACCESS WINDOW. A skylight or roof window designed and installed to satisfy the *emergency escape and rescue opening* requirements of Section R310.2.

[MP] ELBOW. A pressure pipe fitting designed to provide an exact change in direction of a pipe run. An elbow provides a sharp turn in the flow path (see “Bend” and “Sweep”).

[RB] EMERGENCY ESCAPE AND RESCUE OPENING. An operable exterior window, door or similar device that provides for a means of escape and access for rescue in the event of an emergency. (See also “Grade floor opening.”)

[S][RE] ENERGY ANALYSIS. For the definition applicable ((~~in Chapter 11~~)) to the *Seattle Residential Energy Code*, see ((~~Section N1101.6~~)) Section R202 in the residential section of the *Seattle Energy Code*.

[S][RE] ENERGY COST. For the definition applicable ((~~in Chapter 11~~)) to the *Seattle Residential Energy Code*, see ((~~Section N1101.6~~)) Section R202 in the residential section of the *Seattle Energy Code*.

DRAFT

[S][RE] ENERGY SIMULATION TOOL. For the definition applicable ((~~in Chapter 11~~)) to the *Seattle Residential Energy Code*, see ((~~Section N1101.6~~)) Section R202 in the residential section of the *Seattle Energy Code*.

[W] ENERGY STORAGE SYSTEMS (ESS). One or more devices, assembled together, capable of storing energy in order to supply electrical energy at a future time.

[RB] ENGINEERED WOOD RIM BOARD. A full-depth structural composite lumber, wood structural panel, structural glued laminated timber or prefabricated wood I-joist member designed to transfer horizontal (shear) and vertical (compression) loads, provide attachment for *diaphragm* sheathing, siding and exterior deck ledgers and provide lateral support at the ends of floor or roof joists or rafters.

[MP] EQUIPMENT. Piping, ducts, vents, control devices and other components of systems other than *appliances* that are permanently installed and integrated to provide control of environmental conditions for buildings. This definition shall also include other systems specifically regulated in this code.

[MP] EQUIVALENT LENGTH. For determining friction losses in a piping system, the effect of a particular fitting equal to the friction loss through a straight piping length of the same nominal diameter.

[S][RE] ERI REFERENCE DESIGN. For the definition applicable ((~~in Chapter 11~~)) to the *Seattle Residential Energy Code*, see ((~~Section N1101.6~~)) Section R202 in the residential section of the *Seattle Energy Code*.

[RB] ESCARPMENT. With respect to topographic wind effects, a cliff or steep slope generally separating two levels or gently sloping areas.

[MP] ESSENTIALLY NONTOXIC TRANSFER FLUIDS. Fluids having a Gosselin rating of 1, including propylene glycol; mineral oil; polydimethy oil oxane; hydrochlorofluorocarbon, chlorofluorocarbon and hydrofluorocarbon refrigerants; and FDA-approved boiler water additives for steam boilers.

[MP] ESSENTIALLY TOXIC TRANSFER FLUIDS. Soil, water or graywater and fluids having a Gosselin rating of 2 or more including ethylene glycol, hydrocarbon oils, ammonia refrigerants and hydrazine.

[MP] EVAPORATIVE COOLER. A device used for reducing air temperature by the process of evaporating water into an airstream.

[MP] EXCESS AIR. Air that passes through the combustion chamber and the *appliance* flue in excess of what is theoretically required for complete combustion.

[MP] EXHAUST HOOD, FULL OPENING. An exhaust hood with an opening not less than the diameter of the connecting vent.

[MP] EXISTING INSTALLATIONS. Any plumbing system regulated by this code that was legally installed prior to the effective date of this code, or for which a *permit* to install has been issued.

[RB] EXPANSIVE SOILS. Soils that exhibit volumetric increase or decrease (swelling or shrinking) in response to partial or full wetting or drying under load.

[RB] EXTERIOR INSULATION AND FINISH SYSTEMS (EIFS). EIFS are nonstructural, nonload-bearing *exterior wall* cladding systems that consist of an insulation board attached either adhesively or mechanically, or both, to the substrate; an integrally reinforced base coat; and a textured protective finish coat.

[RB] EXTERIOR INSULATION AND FINISH SYSTEMS (EIFS) WITH DRAINAGE. An EIFS that incorporates a means of drainage applied over a water-resistive barrier.

[S][RE] EXTERIOR WALL. For the definition applicable ((~~in Chapter 11~~)) to the *Seattle Residential Energy Code*, see ((~~Section N1101.6~~)) Section R202 in the residential section of the *Seattle Energy Code*.

[RB] EXTERIOR WALL COVERING. A material or assembly of materials applied on the exterior side of exterior walls for the purpose of providing a weather-resistive barrier, insulation or for aesthetics, including but not limited to, veneers, siding, exterior insulation and finish systems, architectural trim and embellishments such as cornices, soffits, and fascias.

[RB] FACING. The wood structural panel facings that form the two outmost rigid layers of the structural insulated panel.

[MP] FACTORY-BUILT CHIMNEY. A *listed* and *labeled* chimney composed of factory-made components assembled in the field in accordance with the manufacturer's instructions and the conditions of the *listing*.

[MP] FACTORY-MADE AIR DUCT. A *listed and labeled* duct manufactured in a factory and assembled in the field in accordance with the manufacturer's instructions and conditions of the *listing*.

[S][RE] FENESTRATION. Products classified as either vertical fenestration or skylights and sloped glazing, installed in such a manner as to preserve the weather-resistant barrier of the wall or roof in which they are installed. Fenestration includes products with glass or other transparent or translucent materials.

For the definition applicable ((~~in Chapter 11~~)) to the *Seattle Residential Energy Code*, see ((~~Section N1101.6~~)) Section R202 in the residential section of the *Seattle Energy Code*.

DRAFT

Skylights. For the definition applicable ((~~in Chapter 11~~)) to the *Seattle Residential Energy Code*, see ((~~Section N1101.6~~)) Section R202 in the residential section of the *Seattle Energy Code*.

Vertical fenestration. For the definition applicable ((~~in Chapter 11~~)) to the *Seattle Residential Energy Code*, see ((~~Section N1101.6~~)) Section R202 in the residential section of the *Seattle Energy Code*.

[S][RE] FENESTRATION, VERTICAL. Windows that are fixed or movable, opaque doors, glazed doors, glazed block and combination opaque and glazed doors installed in a wall at less than 15 degrees from vertical.

For the definition applicable ((~~in Chapter 11~~)) to the *Seattle Residential Energy Code*, see ((~~Section N1101.6~~)) Section R202 in the residential section of the *Seattle Energy Code*.

[S][RE] FENESTRATION PRODUCT, SITE-BUILT. For the definition applicable ((~~in Chapter 11~~)) to the *Seattle Residential Energy Code*, see ((~~Section N1101.6~~)) Section R202 in the residential section of the *Seattle Energy Code*.

[RB] FIBER-CEMENT (BACKERBOARD, SIDING, SOFFIT, TRIM AND UNDERLAYMENT) PRODUCTS. Manufactured thin section composites of hydraulic cementitious matrices and discrete nonasbestos fibers.

[W][RB] FIRE SEPARATION DISTANCE. The distance measured from the ((~~building~~)) foundation wall or face of the wall framing, whichever is closer, to one of the following:

1. To the closest interior *lot line*; or
2. To the ((~~centerline~~)) opposite side of a street, an alley or public way; or
3. To an imaginary line between two buildings on the *lot*.

The distance shall be measured at a right angle from ((~~the face of~~)) the wall.

[RB] FIREBLOCKING. Building materials or materials *approved* for use as fireblocking, installed to resist the free passage of flame to other areas of the building through concealed spaces.

[RB] FIREPLACE. An assembly consisting of a hearth and fire chamber of noncombustible material and provided with a chimney, for use with solid fuels.

Factory-built fireplace. A *listed* and *labeled* fireplace and chimney system composed of factory-made components, and assembled in the field in accordance with manufacturer's instructions and the conditions of the listing.

Masonry fireplace. A field-constructed fireplace composed of *solid masonry* units, bricks, stones or concrete.

[MP] FIREPLACE STOVE. A free-standing, chimney-connected solid-fuel-burning heater designed to be operated with the fire chamber doors in either the open or closed position.

[RB] FIREPLACE THROAT. The opening between the top of the firebox and the smoke chamber.

[RB] FIRE-RETARDANT-TREATED WOOD. Pressure-treated lumber and plywood that exhibit reduced surface burning characteristics and resist propagation of fire.

Other means during manufacture. A process where the wood raw material is treated with a fire-retardant formulation while undergoing creation as a finished product.

Pressure process. A process for treating wood using an initial vacuum followed by the introduction of pressure above atmospheric.

[MP] FIXTURE. See "Plumbing fixture."

[MP] FIXTURE BRANCH, DRAINAGE. A drain serving two or more fixtures that discharges into another portion of the drainage system.

[MP] FIXTURE BRANCH, WATER-SUPPLY. A water-supply pipe between the fixture supply and a main water-distribution pipe or fixture group main.

[MP] FIXTURE DRAIN. The drain from the trap of a fixture to the junction of that drain with any other drain pipe.

[MP] FIXTURE FITTING.

Supply fitting. A fitting that controls the volume or directional flow or both of water and that is either attached to or accessed from a fixture or is used with an open or atmospheric discharge.

Waste fitting. A combination of components that conveys the sanitary waste from the outlet of a fixture to the connection of the sanitary drainage system.

[MP] FIXTURE GROUP, MAIN. The main water-distribution pipe (or secondary branch) serving a plumbing fixture grouping such as a bath, kitchen or laundry area to which two or more individual fixture branch pipes are connected.

[MP] FIXTURE SUPPLY. The water-supply pipe connecting a fixture or fixture fitting to a fixture branch.

[MP] FIXTURE UNIT, DRAINAGE (d.f.u.). A measure of probable discharge into the drainage system by various types of plumbing fixtures, used to size DWV piping systems. The drainage fixture-unit value for a particular fixture depends on its vol-

DRAFT

ume rate of drainage discharge, on the time duration of a single drainage operation and on the average time between successive operations.

[MP] FIXTURE UNIT, WATER-SUPPLY (w.s.f.u.). A measure of the probable hydraulic demand on the water supply by various types of plumbing fixtures used to size water-piping systems. The water-supply fixture-unit value for a particular fixture depends on its volume rate of supply, on the time duration of a single supply operation and on the average time between successive operations.

[RB] FLAME SPREAD. The propagation of flame over a surface.

[RB] FLAME SPREAD INDEX. A comparative measure, expressed as a dimensionless number, derived from visual measurements of the spread of flame versus time for a material tested in accordance with ASTM E84 or UL 723.

[MP] FLEXIBLE AIR CONNECTOR. A conduit for transferring air between an air duct or plenum and an air terminal unit, an air inlet or an air outlet. Such conduit is limited in its use, length and location.

[RB] FLIGHT. A continuous run of rectangular treads or winders or combination thereof from one landing to another.

[S] FLOATING HOME. A single-family dwelling constructed to float, which is moored, anchored or otherwise secured in waters. A floating home is not a vessel, even though it may be capable of being towed, and is not a "floating on water residence" as defined in the *Seattle Municipal Code* Title 23.

[S] FLOATING HOME MOORAGE. A waterfront facility for the moorage of one or more *floating homes* and the land and water premises on which it is located.

[S] FLOATING HOME SITE. A part of a *floating home moorage*, located over water, and designed to accommodate one *floating home*.

[MP] FLOOD-LEVEL RIM. The edge of the receptor or fixture from which water overflows.

[W] FLOOR AREA. The area within the inside perimeter of exterior walls of the building. The floor area of a building, or portion thereof, not provided with surrounding exterior walls shall be the usable area under the horizontal projection of the roof or floor above.

[MP] FLOOR DRAIN. A plumbing fixture for recess in the floor having a floor-level strainer intended for the purpose of the collection and disposal of wastewater used in cleaning the floor and for the collection and disposal of accidental spillage to the floor.

[MP] FLOOR FURNACE. A self-contained furnace suspended from the floor of the space being heated, taking air for combustion from outside such space, and with means for lighting the *appliance* from such space.

[MP] FLOW PRESSURE. The static pressure reading in the water-supply pipe near the faucet or water outlet while the faucet or water outlet is open and flowing at capacity.

[MP] FLUE. See "Vent."

[MP] FLUE, APPLIANCE. The passages within an *appliance* through which combustion products pass from the combustion chamber to the flue collar.

[MP] FLUE COLLAR. The portion of a fuel-burning *appliance* designed for the attachment of a draft hood, vent connector or venting system.

[MP] FLUE GASES. Products of combustion plus excess air in *appliance* flues or heat exchangers.

[MP] FLUSH VALVE. A device located at the bottom of a flush tank that is operated to flush water closets.

[MP] FLUSHOMETER TANK. A device integrated within an air accumulator vessel that is designed to discharge a predetermined quantity of water to fixtures for flushing purposes.

[MP] FLUSHOMETER VALVE. A flushometer valve is a device that discharges a predetermined quantity of water to fixtures for flushing purposes and is actuated by direct water pressure.

[RB] FOAM BACKER BOARD. Foam plastic used in siding applications where the foam plastic is a component of the siding.

[RB] FOAM PLASTIC INSULATION. A plastic that is intentionally expanded by the use of a foaming agent to produce a reduced-density plastic containing voids consisting of open or closed cells distributed throughout the plastic for thermal insulating or acoustic purposes and that has a density less than 20 pounds per cubic foot (320 kg/m^3) unless it is used as interior trim.

[RB] FOAM PLASTIC INTERIOR TRIM. Exposed foam plastic used as picture molds, chair rails, crown moldings, baseboards, handrails, ceiling beams, door trim and window trim and similar decorative or protective materials used in fixed applications.

[MP] FUEL-PIPING SYSTEM. All piping, tubing, valves and fittings used to connect fuel utilization *equipment* to the point of fuel delivery.

DRAFT

[MP] FULL-OPEN VALVE. A water control or shutoff component in the water supply system piping that, where adjusted for maximum flow, the flow path through the component's closure member is not a restriction in the component's through-flow area.

[MP] FULLWAY VALVE. A valve that in the full open position has an opening cross-sectional area that is not less than 85 percent of the cross-sectional area of the connecting pipe.

[MP] FURNACE. A vented heating *appliance* designed or arranged to discharge heated air into a *conditioned space* or through a duct or ducts.

[S] GARBAGE. All discarded putrescible waste matter, including small dead animals weighing not over 15 pounds (6.8 kg), but not including sewage or human or animal excrement.

[RB] GLAZING AREA. The interior surface area of all glazed fenestration, including the area of sash, curbing or other framing elements, that enclose *conditioned space*. Includes the area of glazed fenestration assemblies in walls bounding conditioned *basements*.

[RB] GRADE. The finished ground level adjoining the building at all *exterior walls*.

[MP] GRADE, PIPING. See "Slope."

[RB] GRADE FLOOR OPENING. A window or other opening located such that the sill height of the opening is not more than 44 inches (1118 mm) above or below the finished ground level adjacent to the opening. (See also "Emergency escape and rescue opening.")

[RB] GRADE PLANE. A reference plane representing the average of the finished ground level adjoining the building at all *exterior walls*. Where the finished ground level slopes away from the *exterior walls*, the reference plane shall be established by the lowest points within the area between the building and the *lot line* or, where the *lot line* is more than 6 feet (1829 mm) from the building between the structure and a point 6 feet (1829 mm) from the building.

[MP] GRAYWATER. Waste discharged from lavatories, bathtubs, showers, clothes washers and laundry trays.

[MP] GRIDDED WATER DISTRIBUTION SYSTEM. A water distribution system where every water distribution pipe is interconnected so as to provide two or more paths to each fixture supply pipe.

[RB] GROSS AREA OF EXTERIOR WALLS. The normal projection of all *exterior walls*, including the area of all windows and doors installed therein.

[MP] GROUND-SOURCE HEAT PUMP LOOP SYSTEM. Piping buried in horizontal or vertical excavations or placed in a body of water for the purpose of transporting heat transfer liquid to and from a heat pump. Included in this definition are closed loop systems in which the liquid is recirculated and open loop systems in which the liquid is drawn from a well or other source.

[RB] GUARD. A building component or a system of building components located near the open sides of elevated walking surfaces that minimizes the possibility of a fall from the walking surface to the lower level.

[RB] GUESTROOM. Any room or rooms used or intended to be used by one or more guests for living or sleeping purposes.

[RB] GYPSUM BOARD. The generic name for a family of sheet products consisting of a noncombustible core primarily of gypsum with paper surfacing. Gypsum wallboard, gypsum sheathing, gypsum base for gypsum *veneer* plaster, exterior gypsum soffit board, predecorated gypsum board and water-resistant gypsum backing board complying with the standards listed in Section R702.3 and Part IX of this code are types of gypsum board.

[RB] GYPSUM PANEL PRODUCT. The general name for a family of sheet products consisting essentially of gypsum.

[RB] HABITABLE SPACE. A space in a building for living, sleeping, eating or cooking. Bathrooms, toilet rooms, closets, halls, storage or utility spaces and similar areas are not considered *habitable spaces*.

[RB] HANDRAIL. A horizontal or sloping rail intended for grasping by the hand for guidance or support.

[MP] HANGERS. See "Supports."

[MP] HAZARDOUS LOCATION. Any location considered to be a fire hazard for flammable vapors, dust, combustible fibers or other highly combustible substances.

[MP] HEAT PUMP. An *appliance* having heating or heating and cooling capability and that uses refrigerants to extract heat from air, liquid or other sources.

[S][RE] HEATED SLAB. For the definition applicable ((~~in Chapter 11~~)) to the *Seattle Residential Energy Code*, see ((~~Section N1101.6~~)) Section R202 in the residential section of the *Seattle Energy Code*.

[RB] HEIGHT, BUILDING. The vertical distance from *grade plane* to the average height of the highest roof surface.

[RB] HEIGHT, STORY. The vertical distance from top to top of two successive tiers of beams or finished floor surfaces; and, for the topmost *story*, from the top of the floor finish to the top of the ceiling joists or, where there is not a ceiling, to the top of the roof rafters.

DRAFT

[S][RE] HIGH-EFFICACY LAMPS. For the definition applicable ((~~in Chapter 11~~)) to the *Seattle Residential Energy Code*, see ((~~Section N1101.6~~)) Section R202 in the residential section of the *Seattle Energy Code*.

[MP] HIGH-TEMPERATURE (H.T.) CHIMNEY. A high temperature chimney complying with the requirements of UL 103. A Type H.T. chimney is identifiable by the markings "Type H.T." on each chimney pipe section.

[RB] HILL. With respect to topographic wind effects, a land surface characterized by strong relief in any horizontal direction.

[S][RB] HISTORIC BUILDING. ((~~A building or structure that is one or more of the following:~~

1. ~~Listed, or certified as eligible for listing, by the State Historic Preservation Officer or the Keeper of the National Register of Historic Places in the National Register of Historic Places.~~
2. ~~Designated as historic under an applicable state or local law.~~
3. ~~Certified as a contributing resource within a National Register listed, or a state designated or locally designated historic district.~~

~~For the definition applicable in Chapter 11, see Section N1101.6.~~)) See "LANDMARK."

[MP] HORIZONTAL BRANCH, DRAINAGE. A drain pipe extending laterally from a soil or waste stack or *building drain*, that receives the discharge from one or more *fixture drains*.

[MP] HORIZONTAL PIPE. Any pipe or fitting that makes an angle of less than 45 degrees (0.79 rad) with the horizontal.

[MP] HOT WATER. Water at a temperature greater than or equal to 110°F (43°C).

[RB] HURRICANE-PRONE REGIONS. Areas vulnerable to hurricanes, defined as the U.S. Atlantic Ocean and Gulf of Mexico coasts where the ultimate design wind speed, V_{ult}, is greater than 115 miles per hour (51 m/s), and Hawaii, Puerto Rico, Guam, Virgin Islands and America Samoa.

[MP] HYDROGEN-GENERATING APPLIANCE. A self-contained package or factory-matched packages of integrated systems for generating gaseous hydrogen. Hydrogen-generating *appliances* utilize electrolysis, reformation, chemical or other processes to generate hydrogen.

[MP] IGNITION SOURCE. A flame, spark or hot surface capable of igniting flammable vapors or fumes. Such sources include *appliance* burners, burner ignitions and electrical switching devices.

[RB] IMPACT PROTECTIVE SYSTEM. Construction that has been shown by testing to withstand the impact of test missiles and that is applied, attached, or locked over exterior glazing.

[MP] INDIRECT SYSTEM. A solar thermal system in which the gas or liquid in the solar collector loop circulates between the solar collector and a heat exchanger and such gas or liquid is not drained from the system or supplied to the load during normal operation.

[MP] INDIRECT WASTE PIPE. A waste pipe that discharges into the drainage system through an *air gap* into a trap, fixture or receptor.

[MP] INDIVIDUAL SEWAGE DISPOSAL SYSTEM. A system for disposal of sewage by means of a septic tank or mechanical treatment, designed for use apart from a public sewer to serve a single establishment or building.

[MP] INDIVIDUAL VENT. A pipe installed to vent a single *fixture drain* that connects with the vent system above or terminates independently outside the building.

[MP] INDIVIDUAL WATER SUPPLY. A supply other than an approved public water supply that serves one or more families.

[S][RE] INFILTRATION. For the definition applicable ((~~in Chapter 11~~)) to the *Seattle Residential Energy Code*, see ((~~Section N1101.6~~)) Section R202 in the residential section of the *Seattle Energy Code*.

[RB] INSULATED SIDING. A type of continuous insulation, with manufacturer-installed insulating material as an integral part of the cladding product, having a minimum *R*-value of R-2. For the definition applicable in Chapter 11, see Section N1101.6.

[RB] INSULATED VINYL SIDING. A vinyl cladding product, with manufacturer-installed foam plastic insulating material as an integral part of the cladding product, having a thermal resistance of not less than R-2.

[RB] INSULATING CONCRETE FORM (ICF). A concrete forming system using stay-in-place forms of rigid foam plastic insulation, a hybrid of cement and foam insulation, a hybrid of cement and wood chips, or other insulating material for constructing cast-in-place concrete walls.

[S][RB] INSULATING SHEATHING. An insulating board having a thermal resistance of not less than R-2 of the core material.

For the definition applicable ((~~in Chapter 11~~)) to the *Seattle Residential Energy Code*, see ((~~Section N1101.6~~)) Section R202 in the residential section of the *Seattle Energy Code*.

DRAFT

[S][RB] JURISDICTION. The ((~~governmental unit that has adopted this code~~)) City of Seattle.

[RB] KITCHEN. Kitchen shall mean an area used, or designated to be used, for the preparation of food.

[RB] LABEL. An identification applied on a product by the manufacturer that contains the name of the manufacturer, the function and performance characteristics of the product or material, and the name and identification of an *approved agency* and that indicates that the representative sample of the product or material has been tested and evaluated by an *approved agency*. (See also "Manufacturer's designation" and "Mark.")

[S][RB] LABELED. *Equipment*, materials or products to which have been affixed a *label*, seal, symbol or other identifying *mark* of a nationally recognized testing laboratory, approved agency or other organization concerned with product evaluation that maintains periodic inspection of the production of such *labeled* items and whose labeling indicates either that the *equipment*, material or product meets identified standards or has been tested and found suitable for a specified purpose. For the definition applicable ((~~in Chapter 11~~)) to the *Seattle Residential Energy Code*, see ((~~Section N1101.6~~)) Section R202 in the residential section of the *Seattle Energy Code*.

[S] LAND-DISTURBING ACTIVITY. Any activity that results in a movement of earth, or a change in the existing soil cover, both vegetative and nonvegetative, or the existing topography. Land-disturbing activities include, but are not limited to, clearing, grading, filling, excavation or addition of new or the replacement of impervious surface. Compaction, excluding hot asphalt mix, that is associated with stabilization of structures and road construction shall also be considered a land-disturbing activity. Vegetation maintenance practices are not considered land-disturbing activities.

[W] LANDING PLATFORM. A landing provided as the top step of a stairway accessing a *sleeping loft.*

[S] LANDMARK. A building or structure that is subject to a requirement to obtain a certificate of approval from the City Landmarks Preservation Board before altering or making significant changes to specific features or characteristics, that has been nominated for designation and the City Landmarks Preservation Board has not issued a determination regarding designation, that has been designated for preservation by the City Landmarks Preservation Board, that has been designated for preservation by the State of Washington, that has been listed or determined eligible to be listed in the National Register of Historic Places, or that is located in a landmark or special review district subject to a requirement to obtain a certificate of approval before making a change to the external appearance of a structure.

[RB] LIGHT-FRAME CONSTRUCTION. Construction whose vertical and horizontal structural elements are primarily formed by a system of repetitive wood or cold-formed steel framing members.

[S][RB] LISTED. *Equipment*, materials, products or services included in a list published by an organization acceptable to the code official and concerned with evaluation of products or services that maintains periodic inspection of production of *listed equipment* or materials or periodic evaluation of services and whose listing states either that the *equipment*, material, product or service meets identified standards or has been tested and found suitable for a specified purpose. For the definition applicable ((~~in Chapter 11~~)) to the *Seattle Residential Energy Code*, see ((~~Section N1101.6~~)) Section R202 in the residential section of the *Seattle Energy Code*.

[RB] LIVE LOADS. Those loads produced by the use and occupancy of the building or other structure and do not include construction or environmental loads such as wind load, snow load, rain load, earthquake load, flood load or dead load.

[MP] LIVING SPACE. Space within a *dwelling unit* utilized for living, sleeping, eating, cooking, bathing, washing and sanitation purposes.

[W][MP] LOCAL EXHAUST. An exhaust system that uses one or more fans to exhaust air from a specific room or rooms within a residential dwelling or sleeping unit.

[MP] LOCKING-TYPE TAMPER-RESISTANT CAP. A cap designed to be unlocked by a specially designed tool or key to prevent removal of the cap by means of hand-loosening or by commonly available tools.

[RB] LODGING HOUSE. A one-family dwelling where one or more occupants are primarily permanent in nature, and rent is paid for guestrooms.

[W][RB] LOT. A measured portion or parcel of land considered as a unit having fixed boundaries.

[W][RB] LOT LINE. ((~~A~~)) The line ((~~dividing one~~)) which bounds a plot of ground described as a *lot* ((~~from another, or from a street or any public place~~)) in the title to the property.

[S][RE] LOW-VOLTAGE LIGHTING. For the definition applicable ((~~in Chapter 11~~)) to the *Seattle Residential Energy Code*, see ((~~Section N1101.6~~)) Section R202 in the residential section of the *Seattle Energy Code*.

[MP] MACERATING TOILET SYSTEMS. A system comprised of a sump with macerating pump and with connections for a water closet and other plumbing fixtures, that is designed to accept, grind and pump wastes to an *approved* point of discharge.

[MP] MAIN. The principal pipe artery to which branches may be connected.

[MP] MAIN SEWER. See "Public sewer."

DRAFT

[MP] MANIFOLD WATER DISTRIBUTION SYSTEMS. A fabricated piping arrangement in which a large supply main is fitted with multiple branches in close proximity in which water is distributed separately to fixtures from each branch.

[S][RE] MANUAL. For the definition applicable ((~~in Chapter 11~~)) to the *Seattle Residential Energy Code*, see ((~~Section N1101.6~~)) Section R202 in the residential section of the *Seattle Energy Code*.

[RB] MANUFACTURED HOME. *Manufactured home* means a structure, transportable in one or more sections, that in the traveling mode is 8 body feet (2438 body mm) or more in width or 40 body feet (12 192 body mm) or more in length, or, where erected on site, is 320 square feet (30 m^2) or more, and that is built on a permanent chassis and designed to be used as a *dwelling* with or without a permanent foundation where connected to the required utilities, and includes the plumbing, heating, air-conditioning and electrical systems contained therein; except that such term shall include any structure that meets all the requirements of this paragraph except the size requirements and with respect to which the manufacturer voluntarily files a certification required by the secretary (HUD) and complies with the standards established under this title. For mobile homes built prior to June 15, 1976, a *label* certifying compliance to the Standard for Mobile Homes, NFPA 501, in effect at the time of manufacture is required. For the purpose of these provisions, a mobile home shall be considered to be a *manufactured home*.

[RB] MANUFACTURER'S DESIGNATION. An identification applied on a product by the manufacturer indicating that a product or material complies with a specified standard or set of rules. (See also "Mark" and "Label.")

[RB] MANUFACTURER'S INSTALLATION INSTRUCTIONS. Printed instructions included with *equipment* as part of the conditions of their *listing* and *labeling*.

[RB] MARK. An identification applied on a product by the manufacturer indicating the name of the manufacturer and the function of a product or material. (See also "Manufacturer's designation" and "Label.")

[RB] MASONRY CHIMNEY. A field-constructed chimney composed of solid masonry units, bricks, stones or concrete.

[RB] MASONRY HEATER. A masonry heater is a solid fuel burning heating *appliance* constructed predominantly of concrete or solid masonry having a mass of not less than 1,100 pounds (500 kg), excluding the chimney and foundation. It is designed to absorb and store a substantial portion of heat from a fire built in the firebox by routing exhaust gases through internal heat exchange channels in which the flow path downstream of the firebox includes not less than one 180-degree (3.14-rad) change in flow direction before entering the chimney and that deliver heat by radiation through the masonry surface of the heater.

[RB] MASONRY, SOLID. Masonry consisting of solid masonry units laid contiguously with the joints between the units filled with mortar.

[RB] MASONRY UNIT. Brick, tile, stone, architectural cast stone, glass block or concrete block conforming to the requirements specified in Section 2103 of the *International Building Code*.

Clay. A building unit larger in size than a brick, composed of burned clay, shale, fire clay or mixtures thereof.

Concrete. A building unit or block larger in size than 12 inches by 4 inches by 4 inches (305 mm by 102 mm by 102 mm) made of cement and suitable aggregates.

Glass. Nonload-bearing masonry composed of glass units bonded by mortar.

Hollow. A masonry unit with a net cross-sectional area in any plane parallel to the loadbearing surface that is less than 75 percent of its gross cross-sectional area measured in the same plane.

Solid. A masonry unit with a net cross-sectional area in every plane parallel to the loadbearing surface that is 75 percent or more of its cross-sectional area measured in the same plane.

[RB] MEAN ROOF HEIGHT. The average of the roof eave height and the height to the highest point on the roof surface, except that eave height shall be used for roof angle of less than or equal to 10 degrees (0.18 rad).

[MP] MECHANICAL DRAFT SYSTEM. A venting system designed to remove flue or vent gases by mechanical means, that consists of an induced draft portion under nonpositive static pressure or a forced draft portion under positive static pressure.

Forced draft venting system. A portion of a venting system using a fan or other mechanical means to cause the removal of flue or vent gases under positive static pressure.

Induced draft venting system. A portion of a venting system using a fan or other mechanical means to cause the removal of flue or vent gases under nonpositive static vent pressure.

Power venting system. A portion of a venting system using a fan or other mechanical means to cause the removal of flue or vent gases under positive static vent pressure.

[MP] MECHANICAL EXHAUST SYSTEM. A system for removing air from a room or space by mechanical means.

[MP] MECHANICAL JOINT.

1. A connection between pipes, fittings or pipes and fittings that is not welded, brazed, caulked, soldered, solvent cemented or heat-fused.

DRAFT

2. A general form of gas- or liquid-tight connections obtained by the joining of parts through a positive holding mechanical construction such as, but not limited to, flanged, screwed, clamped or flared connections.

[MP] MECHANICAL SYSTEM. A system specifically addressed and regulated in this code and composed of components, devices, *appliances* and *equipment*.

[RB] METAL ROOF PANEL. An interlocking metal sheet having an installed weather exposure of not less than 3 square feet (0.28 m^2) per sheet.

[RB] METAL ROOF SHINGLE. An interlocking metal sheet having an installed weather exposure less than 3 square feet (0.28 m^2) per sheet.

[W][RB] MEZZANINE. An intermediate level or levels between the floor and ceiling of any *story*.

[RB] MODIFIED BITUMEN ROOF COVERING. One or more layers of polymer modified asphalt sheets. The sheet materials shall be fully adhered or mechanically attached to the substrate or held in place with an *approved* ballast layer.

[RB] MULTIPLE-STATION SMOKE ALARM. Two or more single-station alarm devices that are capable of interconnection such that actuation of one causes all integral or separate audible alarms to operate.

[RB] NAILABLE SUBSTRATE. A product or material such as framing, sheathing or furring, composed of wood or wood-based materials, or other materials and fasteners providing equivalent fastener withdrawal resistance.

[MP] NATURAL DRAFT SYSTEM. A venting system designed to remove flue or vent gases under nonpositive static vent pressure entirely by natural draft.

[RB] NATURALLY DURABLE WOOD. The heartwood of the following species with the exception that an occasional piece with corner sapwood is permitted if 90 percent or more of the width of each side on which it occurs is heartwood.

Decay resistant. Redwood, cedar, black locust and black walnut.

Termite resistant. Alaska yellow cedar, redwood, Eastern red cedar and Western red cedar including all sapwood of Western red cedar.

[RB] NONCOMBUSTIBLE MATERIAL. Materials that pass the test procedure for defining noncombustibility of elementary materials set forth in ASTM E136.

[RB] NOSING. The leading edge of treads of stairs and of landings at the top of stairway flights.

[RB] OCCUPIED SPACE. The total area of all buildings or structures on any *lot* or parcel of ground projected on a horizontal plane, excluding permitted projections as allowed by this code.

[MP] OFFSET. A combination of fittings that makes two changes in direction, bringing one section of the pipe out of line and into a line parallel with the other section.

[MP] ON-SITE NONPOTABLE WATER REUSE SYSTEMS. Water systems for the collection, treatment, storage, distribution, and reuse of nonpotable water generated on site, including but not limited to graywater systems. This definition does not include rainwater harvesting systems.

[S][RE] OPAQUE DOOR. For the definition applicable ((~~in Chapter 11~~)) to the *Seattle Residential Energy Code*, see ((~~Section N1101.6~~)) Section R202 in the residential section of the *Seattle Energy Code*.

[RB] OWNER. Any person, agent, firm or corporation having a legal or equitable interest in the property.

[RB] PAN FLASHING. Corrosion-resistant flashing at the base of an opening that is integrated into the building exterior wall to direct water to the exterior and is premanufactured, fabricated, formed or applied at the job site.

[RB] PANEL THICKNESS. Thickness of core plus two layers of structural wood panel facings.

[MP] PELLET FUEL-BURNING APPLIANCE. A closed combustion, vented *appliance* equipped with a fuel feed mechanism for burning processed pellets of solid fuel of a specified size and composition.

[MP] PELLET VENT. A vent *listed* and *labeled* for use with a *listed* pellet fuel-burning *appliance.*

[RB] PERFORMANCE CATEGORY. A designation of wood structural panels as related to the panel performance used in Chapters 4, 5, 6 and 8.

[RB] PERMIT. An official document or certificate issued by the *building official* that authorizes performance of a specified activity.

[S][RB] PERSON. Any individual, ((~~heirs, executors, administrators or assigns, and a~~)) receiver, administrator, executor, trustee in bankruptcy, trust, estate firm, partnership, joint venture, club, company, joint stock company, business trust, municipal corporation, political subdivision of the State of Washington, the State of Washington and any instrumentality thereof, ((~~or~~)) corporation, ((~~its or their successors or assigns, or the agent of any of the aforesaid~~)) limited liability company, association, society or any group of individuals acting as a unit, whether mutual, cooperative, fraternal, nonprofit or otherwise, and the United States or any instrumentality thereof.

DRAFT

[RB] PHOTOVOLTAIC MODULE. A complete, environmentally protected unit consisting of solar cells, optics and other components, exclusive of a tracker, designed to generate DC power where exposed to sunlight.

[RB] PHOTOVOLTAIC PANEL. A collection of photovoltaic modules mechanically fastened together, wired, and designed to provide a field-installable unit.

[RB] PHOTOVOLTAIC PANEL SYSTEM. A system that incorporates discrete photovoltaic panels that convert solar radiation into electricity, including rack support systems.

[RB] PHOTOVOLTAIC SHINGLES. A *roof covering* that resembles shingles and that incorporates photovoltaic modules.

[MP] PITCH. See "Slope."

[RB] PLASTIC COMPOSITE. A generic designation that refers to wood-plastic composites and plastic lumber.

[RB] PLATFORM CONSTRUCTION. A method of construction by which floor framing bears on load bearing walls that are not continuous through the *story* levels or floor framing.

[MP] PLENUM. A chamber that forms part of an air-circulation system other than the *occupied space* being conditioned.

[MP] PLUMBING. For the purpose of this code, plumbing refers to those installations, repairs, maintenance and *alterations* regulated by Chapters 25 through 33.

[MP] PLUMBING APPLIANCE. An energized household *appliance* with plumbing connections, such as a dishwasher, food waste disposer, clothes washer or water heater.

[MP] PLUMBING APPURTENANCE. A device or assembly that is an adjunct to the basic plumbing system and does not demand additional water supply or add any discharge load to the system. It is presumed that it performs some useful function in the operation, maintenance, servicing, economy or safety of the plumbing system. Examples include filters, relief valves and aerators.

[MP] PLUMBING FIXTURE. A receptacle or device that is connected to a water supply system or discharges to a drainage system or both. Such receptacles or devices require a supply of water; or discharge liquid waste or liquidborne solid waste; or require a supply of water and discharge waste to a drainage system.

[MP] PLUMBING SYSTEMS. Includes the water distribution pipes; plumbing fixtures and traps; water-treating or water-using *equipment*; soil, waste and vent pipes; and building drains; in addition to their respective connections, devices and appurtenances within a structure or premises; and the water service, building sewer and building storm sewer serving such structure or premises.

[MP] POLLUTION. A low-hazard or nonhealth-hazard impairment of the quality of the potable water to a degree that does not create a hazard to the public health and that does adversely and unreasonably affect the aesthetic qualities of such potable water for domestic use.

[RB] POLYPROPYLENE SIDING. A shaped material, made principally from polypropylene homopolymer, or copolymer, that in some cases contains fillers or reinforcements, that is used to clad *exterior walls* or buildings.

[MP] PORTABLE-FUEL-CELL APPLIANCE. A fuel cell generator of electricity that is not fixed in place. A portable-fuel-cell *appliance* utilizes a cord and plug connection to a grid-isolated load and has an integral fuel supply.

[RB] POSITIVE ROOF DRAINAGE. The drainage condition in which consideration has been made for the loading deflections of the roof deck, and additional slope has been provided to ensure drainage of the roof within 48 hours of precipitation.

[MP] POTABLE WATER. Water free from impurities present in amounts sufficient to cause disease or harmful physiological effects and conforming in bacteriological and chemical quality to the requirements of the public health authority having jurisdiction.

[RB] PRECAST CONCRETE. A structural concrete element cast elsewhere than its final position in the structure.

[RB] PRECAST CONCRETE FOUNDATION WALLS. Preengineered, precast concrete wall panels that are designed to withstand specified stresses and used to build below-*grade* foundations.

[MP] PRESSURE-RELIEF VALVE. A pressure-actuated valve held closed by a spring or other means and designed to automatically relieve pressure at the pressure at which it is set.

[S][RE] PROPOSED DESIGN. For the definition applicable ((~~in Chapter 11~~)) to the *Seattle Residential Energy Code*, see ((~~Section N1101.6~~)) Section R202 in the residential section of the *Seattle Energy Code*.

[MP] PUBLIC SEWER. A common sewer directly controlled by public authority.

[MP] PUBLIC WATER MAIN. A water-supply pipe for public use controlled by public authority.

[RB] PUBLIC WAY. Any street, alley or other parcel of land open to the outside air leading to a public street, that has been deeded, dedicated or otherwise permanently appropriated to the public for public use and that has a clear width and height of not less than 10 feet (3048 mm).

DRAFT

[MP] PURGE. To clear of air, gas or other foreign substances.

[MP] QUICK-CLOSING VALVE. A valve or faucet that closes automatically where released manually or controlled by mechanical means for fast-action closing.

[RB] RAMP. A walking surface that has a running slope steeper than 1 unit vertical in 20 units horizontal (5-percent slope).

[S][RE] RATED DESIGN. For the definition applicable ((~~in Chapter 11~~)) to the *Seattle Residential Energy Code*, see ((~~Section N1101.6~~)) Section R202 in the residential section of the *Seattle Energy Code*.

[S][RE] READILY ACCESSIBLE. For the definition applicable ((~~in Chapter 11~~)) to the *Seattle Residential Energy Code*, see ((~~Section N1101.6~~)) Section R202 in the residential section of the *Seattle Energy Code*.

[RB] READY ACCESS (TO). That which enables a device, *appliance* or *equipment* to be directly reached, without requiring the removal or movement of any panel, door or similar obstruction.

[MP] RECEPTOR. A fixture or device that receives the discharge from indirect waste pipes.

[MP] RECLAIMED WATER. Nonpotable water that has been derived from the treatment of wastewater by a facility or system licensed or permitted to produce water meeting the *jurisdiction's* water requirements for its intended uses. Also known as "Recycled water."

[MP] REFRIGERANT. A substance used to produce refrigeration by its expansion or evaporation.

[MP] REFRIGERANT COMPRESSOR. A specific machine, with or without accessories, for compressing a given refrigerant vapor.

[MP] REFRIGERATING SYSTEM. A combination of interconnected parts forming a closed circuit in which refrigerant is circulated for the purpose of extracting, then rejecting, heat. A direct refrigerating system is one in which the evaporator or condenser of the refrigerating system is in direct contact with the air or other substances to be cooled or heated. An indirect refrigerating system is one in which a secondary coolant cooled or heated by the refrigerating system is circulated to the air or other substance to be cooled or heated.

[RB] REGISTERED DESIGN PROFESSIONAL. An individual who is registered or licensed to practice their respective design profession as defined by the statutory requirements of the professional registration laws of the state or *jurisdiction* in which the project is to be constructed.

[MP] RELIEF VALVE, VACUUM. A device to prevent excessive buildup of vacuum in a pressure vessel.

[S][RB] REPAIR. The reconstruction, replacement or renewal of any part of an existing building for the purpose of its maintenance or to correct damage.

For the definition applicable ((~~in Chapter 11~~)) to the *Seattle Residential Energy Code*, see ((~~Section N1101.6~~)) Section R202 in the residential section of the *Seattle Energy Code*.

[S][RB] REROOFING. The process of recovering or replacing an existing roof covering. See "Roof recover."

For the definition applicable ((~~in Chapter 11~~)) to the *Seattle Residential Energy Code*, see ((~~Section N1101.6~~)) Section R202 in the residential section of the *Seattle Energy Code*.

[S][RE] RESIDENTIAL BUILDING. For the definition applicable ((~~in Chapter 11~~)) to the *Seattle Residential Energy Code*, see ((~~Section N1101.6~~)) Section R202 in the residential section of the *Seattle Energy Code*.

[MP] RETURN AIR. Air removed from an *approved conditioned space* or location and recirculated or exhausted.

[RB] RIDGE. With respect to topographic wind effects, an elongated crest of a *hill* characterized by strong relief in two directions.

[MP] RISER (PLUMBING). A water pipe that extends vertically one full *story* or more to convey water to branches or to a group of fixtures.

[RB] RISER (STAIR). The vertical component of a step or stair.

[S][RB] ROOF ASSEMBLY. A system designed to provide weather protection and resistance to design loads. The system consists of a roof covering and roof deck or a single component serving as both the roof covering and the roof deck. A roof assembly includes the roof deck, underlayment and *roof covering*, and can also include a thermal barrier, ignition barrier, insulation or a vapor retarder. For the definition applicable ((~~in Chapter 11~~)) to the *Seattle Residential Energy Code*, see ((~~Section N1101.6~~)) Section R202 in the residential section of the *Seattle Energy Code*.

[RB] ROOF COATING. A fluid-applied, adhered coating used for roof maintenance or *roof repair*, or as a component of a *roof covering* system or *roof assembly*.

[RB] ROOF COVERING. The covering applied to the roof deck for weather resistance, fire classification or appearance.

[RB] ROOF COVERING SYSTEM. See "Roof assembly."

[RB] ROOF DECK. The flat or sloped surface not including its supporting members or vertical supports.

DRAFT

[S][RB] ROOF RECOVER. The process of installing an additional *roof covering* over a prepared existing roof covering without removing the existing roof covering. For the definition applicable ((~~in Chapter 11~~)) to the *Seattle Residential Energy Code*, see ((~~Section N1101.6~~)) Section R202 in the residential section of the *Seattle Energy Code*.

[S][RB] ROOF REPAIR. Reconstruction or renewal of any part of an existing roof for the purposes of its maintenance. For the definition applicable ((~~in Chapter 11~~)) to the *Seattle Residential Energy Code*, see ((~~Section N1101.6~~)) Section R202 in the residential section of the *Seattle Energy Code*.

[S][RB] ROOF REPLACEMENT. The process of removing the existing *roof covering*, repairing any damaged substrate and installing a new *roof covering*. For the definition applicable ((~~in Chapter 11~~)) to the *Seattle Residential Energy Code*, see ((~~Section N1101.6~~)) Section R202 in the residential section of the *Seattle Energy Code*.

[MP] ROOM HEATER. A free-standing heating *appliance* installed in the space being heated and not connected to ducts.

[MP] ROUGH-IN. The installation of the parts of the plumbing system that must be completed prior to the installation of fixtures. This includes DWV, water supply and built-in fixture supports.

[RB] RUNNING BOND. The placement of masonry units such that head joints in successive courses are horizontally offset not less than one-quarter the unit length.

[S][RE] *R*-VALUE (THERMAL RESISTANCE). For the definition applicable ((~~in Chapter 11~~)) to the *Seattle Residential Energy Code*, see ((~~Section N1101.6~~)) Section R202 in the residential section of the *Seattle Energy Code*.

[MP] SANITARY SEWER. A sewer that carries sewage and excludes storm, surface and groundwater.

[RB] SCUPPER. An opening in a wall or parapet that allows water to drain from a roof.

[RB] SEISMIC DESIGN CATEGORY (SDC). A classification assigned to a structure based on its occupancy category and the severity of the design earthquake ground motion at the site.

[MP] SEPTIC TANK. A water-tight receptor that receives the discharge of a building sanitary drainage system and is constructed so as to separate solids from the liquid, digest organic matter through a period of detention, and allow the liquids to discharge into the soil outside of the tank through a system of open joint or perforated piping or a seepage pit.

[S][RE] SERVICE WATER HEATING. For the definition applicable ((~~in Chapter 11~~)) to the *Seattle Residential Energy Code*, see ((~~Section N1101.6~~)) Section R202 in the residential section of the *Seattle Energy Code*.

[S][MP] SEWAGE. ((~~Any liquid waste containing animal matter, vegetable matter or other impurity in suspension or solution.~~)) All water-carried waste discharged from the sanitary facilities of buildings occupied or used by people.

[MP] SEWAGE PUMP. A permanently installed mechanical device for removing sewage or liquid waste from a sump.

[RB] SHALL. The term, where used in the code, is construed as mandatory.

[RB] SHEAR WALL. A general term for walls that are designed and constructed to resist racking from seismic and wind by use of masonry, concrete, cold-formed steel or wood framing in accordance with Chapter 6 of this code and the associated limitations in Section R301.2 of this code.

[RB] SHINGLE FASHION. A method of installing roof or wall coverings, water-resistive barriers, flashing or other building components such that upper layers of material are placed overlapping lower layers of material to provide drainage and protect against water intrusion at unsealed penetrations and joints or in combination with sealed joints.

[RB] SINGLE-PLY MEMBRANE. A roofing membrane that is field applied using one layer of membrane material (either homogeneous or composite) rather than multiple layers.

[RB] SINGLE-STATION SMOKE ALARM. An assembly incorporating the detector, control *equipment* and alarm sounding device in one unit that is operated from a power supply either in the unit or obtained at the point of installation.

[S][RE] SKYLIGHT. For the definition applicable ((~~in Chapter 11~~)) to the *Seattle Residential Energy Code*, see ((~~Section N1101.6~~)) Section R202 in the residential section of the *Seattle Energy Code*.

[RB] SKYLIGHT, UNIT. A factory assembled, glazed fenestration unit, containing one panel of glazing material, that allows for natural daylighting through an opening in the roof assembly while preserving the weather-resistant barrier of the roof.

[S][RB] SKYLIGHTS AND SLOPED GLAZING. Glass or other transparent or translucent glazing material installed at a slope of 15 degrees (0.26 rad) or more from vertical. Unit skylights, tubular daylighting devices and glazing materials in solariums, sunrooms, roofs and sloped walls are included in this definition. For the definition applicable ((~~in Chapter 11~~)) to the *Seattle Residential Energy Code*, see ((~~Section N1101.6~~)) Section R202 in the residential section of the *Seattle Energy Code*.

[W] SLEEPING LOFT. A sleeping space on a floor level located more than 30 inches (726 mm) above the main floor and open to the main floor on one or more sides with a ceiling height of less than 6 feet 8 inches (2032 mm).

[MP] SLIP JOINT. A mechanical-type joint used primarily on fixture traps. The joint tightness is obtained by compressing a friction-type washer such as rubber, nylon, neoprene, lead or special packing material against the pipe by the tightening of a (slip) nut.

DRAFT

[MP] SLOPE. The fall (pitch) of a line of pipe in reference to a horizontal plane. In drainage, the slope is expressed as the fall in units vertical per units horizontal (percent) for a length of pipe.

[W] SMALL BUSINESS. Any business entity (including a sole proprietorship, corporation, partnership or other legal entity) which is owned and operated independently from all other businesses, which has the purpose of making a profit, and which has fifty or fewer employees.

[RB] SMOKE-DEVELOPED INDEX. A comparative measure, expressed as a dimensionless number, derived from measurements of smoke obscuration versus time for a material tested in accordance with ASTM E84 or UL 723.

[MP] SOIL STACK OR PIPE. A pipe that conveys sewage containing fecal material.

[RB] SOLAR ENERGY SYSTEM. A system that converts solar radiation to usable energy, including *photovoltaic panel systems* and *solar thermal systems*.

[S][RE] SOLAR HEAT GAIN COEFFICIENT (SHGC). For the definition applicable ((~~in Chapter 11~~)) to the *Seattle Residential Energy Code*, see ((~~Section N1101.6~~)) Section R202 in the residential section of the *Seattle Energy Code*.

[MP] SOLAR THERMAL COLLECTOR. Components in a *solar thermal system* that collect and convert solar radiation to thermal energy.

[MP] SOLAR THERMAL SYSTEM. A system that converts solar radiation to thermal energy for use in heating or cooling.

[RB] SOLID MASONRY. Load-bearing or nonload-bearing construction using masonry units where the net cross-sectional area of each unit in any plane parallel to the bearing surface is not less than 75 percent of its gross cross-sectional area. Solid masonry units shall conform to ASTM C55, C62, C73, C145 or C216.

[RB] SPLINE. A strip of wood structural panel cut from the same material used for the panel facings, used to connect two structural insulated panels. The strip (spline) fits into a groove cut into the vertical edges of the two structural insulated panels to be joined. Splines are used behind each facing of the structural insulated panels being connected as shown in Figure R610.8.

[MP] STACK. Any main vertical DWV line, including offsets, that extends one or more stories as directly as possible to its vent terminal.

[RB] STACK BOND. The placement of masonry units in a bond pattern is such that head joints in successive courses are vertically aligned. For the purpose of this code, requirements for stack bond shall apply to all masonry laid in other than running bond.

[MP] STACK VENT. The extension of soil or waste stack above the highest horizontal drain connected.

[RB] STAIR. A change in elevation, consisting of one or more risers.

[RB] STAIRWAY. One or more flights of stairs, either interior or exterior, with the necessary landings and connecting platforms to form a continuous and uninterrupted passage from one level to another within or attached to a building, porch or deck.

[RB] STAIRWAY, SPIRAL. A stairway with a plan view of closed circular form and uniform section-shaped treads radiating from a minimum-diameter circle.

[S][RE] STANDARD REFERENCE DESIGN. For the definition applicable ((~~in Chapter 11~~)) to the *Seattle Residential Energy Code*, see ((~~Section N1101.6~~)) Section R202 in the residential section of the *Seattle Energy Code*.

[RB] STANDARD TRUSS. Any construction that does not permit the roof-ceiling insulation to achieve the required *R*-value over the *exterior walls*.

[MP] STATIONARY FUEL CELL POWER PLANT. A self-contained package or factory-matched packages that constitute an automatically-operated assembly of integrated systems for generating useful electrical energy and recoverable thermal energy that is permanently connected and fixed in place.

[MP] STORM SEWER, DRAIN. A pipe used for conveying rainwater, surface water, subsurface water and similar liquid waste.

[RB] STORY. That portion of a building included between the upper surface of a floor and the upper surface of the floor or roof next above.

[S][RB] STORY ABOVE GRADE PLANE. Any *story* having its finished floor surface entirely above *grade plane*, or in which the finished surface of the floor next above is either of the following:

1. More than 6 feet (1829 mm) *above grade plane.*
2. More than 12 feet (3658 mm) above the finished ground level at any point; or
3. More than 12 feet (3658 mm) above the finished ground level for more than 25 feet (7620 mm) of the perimeter. Required driveways up to 22 feet (6706 mm) shall not be considered in calculating the 25 foot distance if there is at least 10 feet (3048 mm) between the driveway and all portions of the 25-foot area. See Figure R202S.

DRAFT

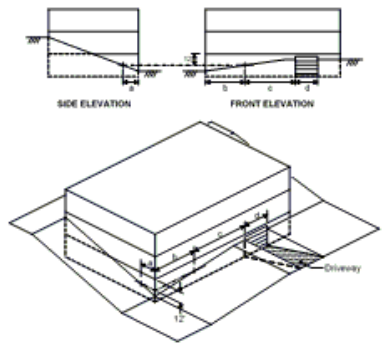

a + b ≤ 25′
c ≥ 10′
d ≤ 22′

Lowest level may be a *basement* below grade if all these are met

Figure R202S
Story Above Grade Plane

[RB] STRUCTURAL COMPOSITE LUMBER. Structural members manufactured using wood elements bonded together with exterior adhesives.

Examples of structural composite lumber are:

Laminated strand lumber (LSL). A composite of wood strand elements with wood fibers primarily oriented along the length of the member, where the least dimension of the wood strand elements is 0.10 inch (2.54 mm) or less and their average lengths are not less than 150 times the least dimension of the wood strand elements.

Laminated veneer lumber (LVL). A composite of wood veneer elements with wood fibers primarily oriented along the length of the member, where the veneer element thicknesses are 0.25 inch (6.4 mm) or less.

Oriented strand lumber (OSL). A composite of wood strand elements with wood fibers primarily oriented along the length of the member, where the least dimension of the wood strand elements is 0.10 inch (2.54 mm) or less and their average lengths are not less than 75 times and less than 150 times the least dimension of the wood strand elements.

Parallel strand lumber (PSL). A composite of wood strand elements with wood fibers primarily oriented along the length of the member, where the least dimension of the wood strand elements is 0.25 inch (6.4 mm) or less and their average lengths are not less than 300 times the least dimension of the wood strand elements.

[RB] STRUCTURAL INSULATED PANEL (SIP). A structural sandwich panel that consists of a lightweight foam plastic core securely laminated between two thin, rigid wood structural panel facings.

[RB] STRUCTURE. That which is built or constructed.

[RB] SUBSOIL DRAIN. A drain that collects subsurface water or seepage water and conveys such water to a place of disposal.

[MP] SUMP. A tank or pit that receives sewage or waste, located below the normal *grade* of the gravity system and that must be emptied by mechanical means.

[MP] SUMP PUMP. A pump installed to empty a sump. These pumps are used for removing storm water only. The pump is selected for the specific head and volume of the load and is usually operated by level controllers.

[S][RB] SUNROOM. A one-story structure attached to a *dwelling* with a *glazing area* in excess of 40 percent of the gross area of the structure's *exterior walls* and roof.

For the definition applicable ((~~in Chapter 11~~)) to the *Seattle Residential Energy Code*, see ((~~Section N1101.6~~)) Section R202 in the residential section of the *Seattle Energy Code*.

[MP] SUPPLY AIR. Air delivered to a *conditioned space* through ducts or plenums from the heat exchanger of a heating, cooling or ventilating system.

[MP] SUPPORTS. Devices for supporting, hanging and securing pipes, fixtures and *equipment*.

[MP] SWEEP. A drainage fitting designed to provide a change in direction of a drain pipe of less than the angle specified by the amount necessary to establish the desired slope of the line. Sweeps provide a longer turning radius than bends and a less turbulent flow pattern (see "Bend" and "Elbow").

DRAFT

[MP] TEMPERATURE- AND PRESSURE-RELIEF (T AND P) VALVE. A combination relief valve designed to function as both a temperature-relief and pressure-relief valve.

[MP] TEMPERATURE-RELIEF VALVE. A temperature-actuated valve designed to discharge automatically at the temperature at which it is set.

[RB] TERMITE-RESISTANT MATERIAL. Pressure-preservative-treated wood in accordance with the AWPA standards in Section R317.1, naturally durable termite-resistant wood, steel, concrete, masonry or other *approved* material.

[S][RE] THERMAL ISOLATION. For the definition applicable ((~~in Chapter 11~~)) to the *Seattle Residential Energy Code*, see ((~~Section N1101.6~~)) Section R202 in the residential section of the *Seattle Energy Code*.

[RE] THERMAL RESISTANCE, *R*-VALUE. See "*R*-value."

[RE] THERMAL TRANSMITTANCE, *U*-FACTOR. See "*U*-factor."

[S][RE] THERMOSTAT. For the definition applicable ((~~in Chapter 11~~)) to the *Seattle Residential Energy Code*, see ((~~Section N1101.6~~)) Section R202 in the residential section of the *Seattle Energy Code*.

[MP] THIRD-PARTY CERTIFICATION AGENCY. An approved agency operating a product or material certification system that incorporates initial product testing, assessment and surveillance of a manufacturer's quality control system.

[MP] THIRD-PARTY CERTIFIED. Certification obtained by the manufacturer indicating that the function and performance characteristics of a product or material have been determined by testing and ongoing surveillance by an approved third-party certification agency. Assertion of certification is in the form of identification in accordance with the requirements of the third-party certification agency.

[W][RB] TOWNHOUSE. A ((~~single-family *dwelling unit* constructed in a group of~~)) *building* that contains three or more attached townhouse units. ((~~in which each unit extends from foundation to roof and with a *yard* or public way on not less than two sides.~~))

[W] TOWNHOUSE UNIT. A single-family dwelling unit in a townhouse that extends from foundation to roof and that has a yard or public way on not less than two sides that extends at least 50 percent of the length of each of these two sides.

[MP] TRAP. A fitting, either separate or built into a fixture, that provides a liquid seal to prevent the emission of sewer gases without materially affecting the flow of sewage or wastewater through it.

[MP] TRAP ARM. That portion of a *fixture drain* between a trap weir and the vent fitting.

[MP] TRAP PRIMER. A device or system of piping to maintain a water seal in a trap, typically installed where infrequent use of the trap would result in evaporation of the trap seal, such as floor drains.

[MP] TRAP SEAL. The trap seal is the maximum vertical depth of liquid that a trap will retain, measured between the crown weir and the top of the dip of the trap.

[RB] TRIM. Picture molds, chair rails, baseboards, handrails, door and window frames, and similar decorative or protective materials used in fixed applications.

[RB] TRUSS DESIGN DRAWING. The graphic depiction of an individual truss, that describes the design and physical characteristics of the truss.

[RB] TUBULAR DAYLIGHTING DEVICE (TDD). A nonoperable fenestration unit primarily designed to transmit daylight from a roof surface to an interior ceiling via a tubular conduit. The basic unit consists of an exterior glazed weathering surface, a light-transmitting tube with a reflective interior surface, and an interior-sealing device such as a translucent ceiling panel. The unit may be factory assembled, or field assembled from a manufactured kit.

[MP] TYPE L VENT. A *listed* and *labeled* vent conforming to UL 641 for venting oil-burning *appliances listed* for use with Type L vents or with gas *appliances listed* for use with Type B vents.

[S][RE] *U*-FACTOR (THERMAL TRANSMITTANCE). For the definition applicable ((~~in Chapter 11~~)) to the *Seattle Residential Energy Code*, see ((~~Section N1101.6~~)) Section R202 in the residential section of the *Seattle Energy Code*.

[RB] UNDERLAYMENT. One or more layers of felt, sheathing paper, nonbituminous saturated felt, or other *approved* material over which a roof covering, with a slope of 2 to 12 (17-percent slope) or greater, is applied.

[S] UNSAFE. Structurally unsound, provided with inadequate egress, constituting a fire hazard, or otherwise dangerous to human life, or constituting a hazard to safety, health, or public welfare.

[MP] VACUUM BREAKER. A device that prevents back-siphonage of water by admitting atmospheric pressure through ports to the discharge side of the device.

[RB] VAPOR DIFFUSION PORT. A passageway for conveying water vapor from an unvented *attic* to the outside atmosphere.

DRAFT

[RB] VAPOR PERMEABLE. The property of having a moisture vapor permeance rating of 5 perms (2.9×10^{-10} kg/Pa • s • m^2) or greater, where tested in accordance with the desiccant method using Procedure A of ASTM E96. A vapor permeable material permits the passage of moisture vapor.

[RB] VAPOR RETARDER CLASS. A measure of the ability of a material or assembly to limit the amount of moisture that passes through that material or assembly. Vapor retarder class shall be defined using the desiccant method with Procedure A of ASTM E96 as follows:

Class I: ≤ 0.1 perm rating

Class II: > 0.1 to ≤ 1.0 perm rating

Class III: > 1.0 to ≤ 10 perm rating

[MP] VENT. A passageway for conveying flue gases from fuel-fired *appliances*, or their vent connectors, to the outside atmosphere.

[MP] VENT COLLAR. See "Flue collar."

[MP] VENT CONNECTOR. That portion of a venting system that connects the flue collar or draft hood of an *appliance* to a vent.

[MP] VENT DAMPER DEVICE, AUTOMATIC. A device intended for installation in the venting system, in the outlet of an individual, automatically operated fuel burning *appliance* and that is designed to open the venting system automatically where the *appliance* is in operation and to close off the venting system automatically where the *appliance* is in a standby or shutdown condition.

[MP] VENT GASES. Products of combustion from fuel-burning *appliances*, plus excess air and dilution air, in the venting system above the draft hood or draft regulator.

[MP] VENT STACK. A vertical vent pipe installed to provide circulation of air to and from the drainage system and that extends through one or more stories.

[MP] VENT SYSTEM. Piping installed to equalize pneumatic pressure in a drainage system to prevent trap seal loss or blowback due to siphonage or back pressure.

[S][RB] VENTILATION. The natural or mechanical process of supplying conditioned or unconditioned air to, or removing such air from, any space.

For the definition applicable ((~~in Chapter 11~~)) to the *Seattle Residential Energy Code*, see ((~~Section N1101.6~~)) Section R202 in the residential section of the *Seattle Energy Code*.

[S][RE] VENTILATION AIR. For the definition applicable ((~~in Chapter 11~~)) to the *Seattle Residential Energy Code*, see ((~~Section N1101.6~~)) Section R202 in the residential section of the *Seattle Energy Code*.

[MP] VENTING. Removal of combustion products to the outdoors.

[MP] VENTING SYSTEM. A continuous open passageway from the flue collar of an *appliance* to the outside atmosphere for the purpose of removing flue or vent gases. A venting system is usually composed of a vent or a chimney and vent connector, if used, assembled to form the open passageway.

[MP] VERTICAL PIPE. Any pipe or fitting that makes an angle of 45 degrees (0.79 rad) or more with the horizontal.

[RB] VINYL SIDING. A shaped material, made principally from rigid polyvinyl chloride (PVC), that is used to cover exterior walls of buildings.

[S][RE] VISIBLE TRANSMITTANCE (VT). For the definition applicable ((~~in Chapter 11~~)) to the *Seattle Residential Energy Code*, see ((~~Section N1101.6~~)) Section R202 in the residential section of the *Seattle Energy Code*.

[RB] WALL, RETAINING. A wall not laterally supported at the top, that resists lateral soil load and other imposed loads.

[RB] WALLS. Walls shall be defined as follows:

Load-bearing wall. A wall supporting any vertical load in addition to its own weight.

Nonbearing wall. A wall which does not support vertical loads other than its own weight.

[MP] WASTE. Liquidborne waste that is free of fecal matter.

[MP] WASTE PIPE OR STACK. Piping that conveys only liquid sewage not containing fecal material.

[MP] WASTE RECEPTOR. A floor sink, standpipe, hub drain or a floor drain that receives the discharge of one or more indirect waste pipes.

[MP] WATER DISTRIBUTION SYSTEM. Piping that conveys water from the service to the plumbing fixtures, *appliances*, appurtenances, *equipment*, devices or other systems served, including fittings and control valves.

DRAFT

[S][MP] WATER HEATER. Any heating *appliance* or *equipment* that heats potable water and supplies such water to the potable hot water distribution system, and includes only those *appliances* that do not exceed pressure of 160 pounds per square inch (1103 kPa), volume of 120 gallons (454 L) and a heat input of 200,000 Btu/hr (58.6 kW). *Appliances* and *equipment* that exceed these values are classified as boilers.

[MP] WATER MAIN. A water supply pipe for public use.

[MP] WATER OUTLET. A valved discharge opening, including a hose bibb, through which water is removed from the potable water system supplying water to a plumbing fixture or plumbing *appliance* that requires either an *air gap* or backflow prevention device for protection of the supply system.

[RB] WATER-RESISTIVE BARRIER. A material behind an *exterior wall* covering that is intended to resist liquid water that has penetrated behind the exterior covering from further intruding into the *exterior wall* assembly.

[MP] WATER SERVICE PIPE. The outside pipe from the water main or other source of potable water supply to the water distribution system inside the building, terminating at the service valve.

[MP] WATER SUPPLY SYSTEM. The water service pipe, the water-distributing pipes and the necessary connecting pipes, fittings, control valves and appurtenances in or adjacent to the building or premises.

[MP] WET VENT. A vent that receives the discharge of wastes from other fixtures.

[W][S][MP] WHOLE-HOUSE ((~~MECHANICAL~~)) VENTILATION SYSTEM. ((~~An exhaust system, supply~~)) A mechanical ventilation system, ((~~or combination thereof that is designed to mechanically exchange indoor air for outdoor air where operating continuously or through a programmed intermittent schedule to satisfy the whole-house ventilation rate~~)) including fans, controls, and ducts, which replaces, by direct means, air from the habitable rooms with outdoor air.

For the definition applicable ((~~in Chapter 11~~)) to the *Seattle Residential Energy Code*, see ((~~Section N1101.6~~)) Section R202 in the residential section of the *Seattle Energy Code*.

[RB] WINDBORNE DEBRIS REGION. Areas within *hurricane-prone regions* located in accordance with one of the following:

1. Within 1 mile (1.61 km) of the coastal mean high-water line where the ultimate design wind speed, V_{ult}, is 130 mph (58 m/s) or greater.
2. In areas where the ultimate design wind speed, V_{ult}, is 140 mph (63.6 m/s) or greater; or Hawaii.

[RB] WINDER. A tread with nonparallel edges.

[RB] WOOD STRUCTURAL PANEL. A panel manufactured from veneers; or wood strands or wafers; bonded together with waterproof synthetic resins or other suitable bonding systems. Examples of wood structural panels are plywood, orientated strand board (OSB) or composite panels.

[RB] YARD. An open space, other than a court, unobstructed from the ground to the sky, except where specifically provided by this code, on the *lot* on which a building is situated.

[S][RE] ZONE. For the definition applicable ((~~in Chapter 11~~)) to the *Seattle Residential Energy Code*, see ((~~Section N1101.6~~)) Section R202 in the residential section of the *Seattle Energy Code*.

DRAFT

DRAFT

Part III—Building Planning and Construction

CHAPTER 3

BUILDING PLANNING

User note:

About this chapter: *Chapter 3 contains a wide array of building planning requirements that are critical to designing a safe and usable building. This includes, but is not limited to, requirements related to: general structural design, fire-resistant construction, light, ventilation, sanitation, plumbing fixture clearances, minimum room area and ceiling height, safety glazing, means of egress, automatic fire sprinkler systems, smoke and carbon monoxide alarm systems, accessibility, solar energy systems, swimming pools, spas and hot tubs.*

SECTION R301
DESIGN CRITERIA

R301.1 Application. Buildings and structures, and parts thereof, shall be constructed to safely support all loads, including dead loads, live loads, roof loads, flood loads, snow loads, wind loads and seismic loads as prescribed by this code. The construction of buildings and structures in accordance with the provisions of this code shall result in a system that provides a complete load path that meets the requirements for the transfer of loads from their point of origin through the load-resisting elements to the foundation. Buildings and structures constructed as prescribed by this code are deemed to comply with the requirements of this section.

R301.1.1 Alternative provisions. As an alternative to the requirements in Section R301.1, the following standards are permitted subject to the limitations of this code and the limitations therein. Where engineered design is used in conjunction with these standards, the design shall comply with the *International Building Code*.

1. AWC *Wood Frame Construction Manual* (WFCM).
2. AISI *Standard for Cold-Formed Steel Framing—Prescriptive Method for One- and Two-Family Dwellings* (AISI S230).
3. ICC *Standard on the Design and Construction of Log Structures* (ICC 400).

R301.1.2 Construction systems. The requirements of this code are based on platform and balloon-frame construction for light-frame buildings. The requirements for concrete and masonry buildings are based on a balloon framing system. Other framing systems must have equivalent detailing to ensure force transfer, continuity and compatible deformations.

R301.1.3 Engineered design. Where a building of otherwise conventional construction contains structural elements exceeding the limits of Section R301 or otherwise not conforming to this code, these elements shall be designed in accordance with accepted engineering practice. The extent of such design need only demonstrate compliance of nonconventional elements with other applicable provisions and shall be compatible with the performance of the conventional framed system. Engineered design in accordance with the *International Building Code* is permitted for buildings and structures, and parts thereof, included in the scope of this code.

[W][S] R301.2 Climatic and geographic design criteria. Buildings shall be constructed in accordance with the provisions of this code as limited by the provisions of this section. Additional criteria ((~~shall be~~)) <u>are</u> established ((~~by the local *jurisdiction* and set forth~~)) in Table R301.2(1).

DRAFT

[S] TABLE R301.2(1)
CLIMATIC AND GEOGRAPHIC DESIGN CRITERIA

GROUND SNOW LOAD[o]	WIND DESIGN				SEISMIC DESIGN CATEGORY[f]	SUBJECT TO DAMAGE FROM			WINTER DESIGN TEMP[e]	ICE BARRIER UNDERLAYMENT REQUIRED[h]	FLOOD HAZARDS[g]	AIR FREEZING INDEX[i]	MEAN ANNUAL TEMP[j]
	Speed[d] (mph)	Topographic effects[k]	Special wind region[l]	Windborne debris zone[m]		Weathering[a]	Frost line depth[b]	Termite[c]					
25 psf	85	No	No	No	D_2	Moderate	12"	none to slight	24º F	No	(a) 1989 (b) May 16, 1995	250	52.8º F

MANUAL J DESIGN CRITERIA[n]							
Elevation	Latitude	Winter heating	Summer cooling	Altitude correction factor	Indoor design temperature	Design temperature cooling	Heating temperature difference
—	—	—	—	—	—	—	—
Cooling temperature difference	Wind velocity heating	Wind velocity cooling	Coincident wet bulb	Daily range	Winter humidity	Summer humidity	—
—	—	—	—	—	—	—	—

For SI: 1 pound per square foot = 0.0479 kPa, 1 mile per hour = 0.447 m/s.

a. Where weathering requires a higher strength concrete or grade of masonry than necessary to satisfy the structural requirements of this code, the frost line depth strength required for weathering shall govern. The weathering column shall be filled in with the weathering index, "negligible," "moderate" or "severe" for concrete as determined from Figure R301.2(4). The grade of masonry units shall be determined from ASTM C34, C55, C62, C73, C90, C129, C145, C216 or C652.

b. Where the frost line depth requires deeper footings than indicated in Figure R403.1(1), the frost line depth strength required for weathering shall govern. The jurisdiction shall fill in the frost line depth column with the minimum depth of footing below finish grade.

c. The jurisdiction shall fill in this part of the table to indicate the need for protection depending on whether there has been a history of local subterranean termite damage.

d. The jurisdiction shall fill in this part of the table with the wind speed from the basic wind speed map [Figure R301.2(5)A]. Wind exposure category shall be determined on a site-specific basis in accordance with Section R301.2.1.4.

e. ((~~The outdoor design dry-bulb temperature shall be selected from the columns of 97-1/2-percent values for winter from Appendix D of the *International Plumbing Code*. Deviations from the Appendix D temperatures shall be permitted to reflect local climates or local weather experience as determined by the *building official*.~~)) The winter design temperature is taken from the *International Energy Conservation Code*. ~~[Also see Figure R301.2(1).]~~

f. The jurisdiction shall fill in this part of the table with the seismic design category determined from Section R301.2.2.1.

g. The jurisdiction shall fill in this part of the table with (a) the date of the jurisdiction's entry into the National Flood Insurance Program (date of adoption of the first code or ordinance for management of flood hazard areas), (b) the date(s) of the Flood Insurance Study ((~~and (c) the panel numbers and dates of the currently effective FIRMs and FBFMs or other flood hazard map adopted by the authority having *jurisdiction*, as amended~~)). Flood hazard areas include areas mapped by Seattle Public Utilities.

h. In accordance with Sections R905.1.2, R905.4.3.1, R905.5.3.1, R905.6.3.1, R905.7.3.1 and R905.8.3.1, where there has been a history of local damage from the effects of ice damming, the jurisdiction shall fill in this part of the table with "YES." Otherwise, the jurisdiction shall fill in this part of the table with "NO."

i. The jurisdiction shall fill in this part of the table with the 100-year return period air freezing index (BF-days) from Figure R403.3(2) or from the 100-year (99 percent) value on the National Climatic Data Center data table "Air Freezing Index-USA Method (Base 32°F)."

j. The jurisdiction shall fill in this part of the table with the mean annual temperature from the National Climatic Data Center data table "Air Freezing Index-USA Method (Base 32°F)."

k. In accordance with Section R301.2.1.5, where there is local historical data documenting structural damage to buildings due to topographic wind speed-up effects, the jurisdiction shall fill in this part of the table with "YES." Otherwise, the jurisdiction shall indicate "NO" in this part of the table.

l. In accordance with Figure R301.2(5)A, where there is local historical data documenting unusual wind conditions, the jurisdiction shall fill in this part of the table with "YES" and identify any specific requirements. Otherwise, the jurisdiction shall indicate "NO" in this part of the table.

m. In accordance with Section R301.2.1.2 the jurisdiction shall indicate the wind-borne debris wind zone(s). Otherwise, the jurisdiction shall indicate "NO" in this part of the table.

n. The jurisdiction shall fill in these sections of the table to establish the design criteria using Table 1a or 1b from ACCA Manual J or established criteria determined by the jurisdiction.

o. The jurisdiction shall fill in this section of the table using the Ground Snow Loads in Figure R301.2(6).

DRAFT

[W][S] TABLE R301.5
MINIMUM UNIFORMLY DISTRIBUTED LIVE LOADS
(in pounds per square foot)

USE	LIVE LOAD
Uninhabitable attics without storage[b]	10
Uninhabitable attics with limited storage[b, g]	20
Habitable attics and attics served with fixed stairs	30
Balconies (exterior) and decks[e]	((~~40~~)) 60[i]
Fire escapes	40
Guards and handrails[d]	200[h]
Guard in-fill components[f]	50[h]
Passenger vehicle garages[a]	50[a]
Rooms other than sleeping rooms	40
Sleeping rooms	30
Stairs	40[c]

For SI: 1 pound per square foot = 0.0479 kPa, 1 square inch = 645 mm^2,
1 pound = 4.45 N.

a. Elevated garage floors shall be capable of supporting a 2,000-pound load applied over a 20-square-inch area.

b. Uninhabitable attics without storage are those where the clear height between joists and rafters is not more than 42 inches, or where there are not two or more adjacent trusses with web configurations capable of accommodating an assumed rectangle 42 inches in height by 24 inches in width, or greater, within the plane of the trusses. This live load need not be assumed to act concurrently with any other live load requirements.

c. Individual stair treads shall be designed for the uniformly distributed live load or a 300-pound concentrated load acting over an area of 4 square inches, whichever produces the greater stresses.

d. A single concentrated load applied in any direction at any point along the top.

e. See Section R507.1 for decks attached to exterior walls.

f. Guard in-fill components (all those except the handrail), balusters and panel fillers shall be designed to withstand a horizontally applied normal load of 50 pounds on an area equal to 1 square foot. This load need not be assumed to act concurrently with any other live load requirement.

g. Uninhabitable attics with limited storage are those where the clear height between joists and rafters is 42 inches or greater, or where there are two or more adjacent trusses with web configurations capable of accommodating an assumed rectangle 42 inches in height by 24 inches in width, or greater, within the plane of the trusses.

The live load need only be applied to those portions of the joists or truss bottom chords where all of the following conditions are met:

1. The attic area is accessed from an opening not less than 20 inches in width by 30 inches in length that is located where the clear height in the attic is not less than 30 inches.
2. The slopes of the joists or truss bottom chords are not greater than 2 inches vertical to 12 units horizontal.
3. Required insulation depth is less than the joist or truss bottom chord member depth.

The remaining portions of the joists or truss bottom chords shall be designed for a uniformly distributed concurrent live load of not less than 10 pounds per square foot.

h. Glazing used in handrail assemblies and guards shall be designed with a safety factor of 4. The safety factor shall be applied to each of the concentrated loads applied to the top of the rail, and to the load on the in-fill components. These loads shall be determined independent of one another, and loads are assumed not to occur with any other live load.

i. Where structural tables in Section R507 only specify snow loads, the values corresponding to 70 psf snow loads shall be used.

DRAFT

R301.6 Roof load. The roof shall be designed for the live load indicated in Table R301.6 or the snow load indicated in Table R301.2(1), whichever is greater.

TABLE R301.6
MINIMUM ROOF LIVE LOADS IN POUNDS-FORCE
PER SQUARE FOOT OF HORIZONTAL PROJECTION

ROOF SLOPE	TRIBUTARY LOADED AREA IN SQUARE FEET FOR ANY STRUCTURAL MEMBER		
	0 to 200	201 to 600	Over 600
Flat or rise less than 4 inches per foot (1:3)	20	16	12
Rise 4 inches per foot (1:3) to less than 12 inches per foot (1:1)	16	14	12
Rise 12 inches per foot (1:1) and greater	12	12	12

For SI: 1 square foot = 0.0929 m^2, 1 pound per square foot = 0.0479 kPa,
1 inch per foot = 83.3 mm/m.

R301.7 Deflection. The allowable deflection of any structural member under the live load listed in Sections R301.5 and R301.6 or wind loads determined by Section R301.2.1 shall not exceed the values in Table R301.7.

TABLE R301.7
ALLOWABLE DEFLECTION OF STRUCTURAL MEMBERS[b, c]

STRUCTURAL MEMBER	ALLOWABLE DEFLECTION
Rafters having slopes greater than 3:12 with finished ceiling not attached to rafters	*L*/180
Interior walls and partitions	*H*/180
Floors	*L*/360
Ceilings with brittle finishes (including plaster and stucco)	*L*/360
Ceilings with flexible finishes (including gypsum board)	*L*/240
All other structural members	*L*/240
Exterior walls—wind loads[a] with plaster or stucco finish	*H*/360
Exterior walls—wind loads[a] with other brittle finishes	*H*/240
Exterior walls—wind loads[a] with flexible finishes	*H*/120[d]
Lintels supporting masonry veneer walls[e]	*L*/600

Note: *L* = span length, *H* = span height.

a. For the purpose of the determining deflection limits herein, the wind load shall be permitted to be taken as 0.7 times the component and cladding (ASD) loads obtained from Table R301.2(2).

b For cantilever members, *L* shall be taken as twice the length of the cantilever.

c. For aluminum structural members or panels used in roofs or walls of sunroom additions or patio covers, not supporting edge of glass or sandwich panels, the total load deflection shall not exceed *L*/60. For continuous aluminum structural members supporting edge of glass, the total load deflection shall not exceed *L*/175 for each glass lite or *L*/60 for the entire length of the member, whichever is more stringent. For sandwich panels used in roofs or walls of sunroom additions or patio covers, the total load deflection shall not exceed *L*/120.

d. Deflection for exterior walls with interior gypsum board finish shall be limited to an allowable deflection of *H*/180.

e. Refer to Section R703.8.2.

R301.8 Nominal sizes. For the purposes of this code, dimensions of lumber specified shall be deemed to be nominal dimensions unless specifically designated as actual dimensions.

DRAFT

SECTION R302
FIRE-RESISTANT CONSTRUCTION

[S] R302.1 Exterior walls. Construction, projections, openings and penetrations of *exterior walls* of *dwellings* and accessory buildings shall comply with Table R302.1(1); or *dwellings* equipped throughout with an *automatic sprinkler system* installed in accordance with Section P2904 shall comply with Table R302.1(2).

Exceptions:

1. Walls, projections, openings or penetrations in walls perpendicular to the line used to determine the *fire separation distance*.
2. Walls of *individual dwelling units* and their *accessory structures* located on the same *lot*.
3. Detached tool sheds and storage sheds, playhouses and similar structures exempted from permits by Section R105.2 are not required to provide ((~~wall~~)) protection based on location on the *lot*. Projections beyond the *exterior wall* shall not extend over the *lot line*.
4. Detached garages accessory to a *dwelling* located within 2 feet (610 mm) of a *lot line* are permitted to have roof eave projections not exceeding 4 inches (102 mm).
5. Foundation vents installed in compliance with this code are permitted.

Interpretation R302.1: For purposes of Section R302.1, gutters 6 inches (152 mm) or less in width that are not an integral part of the structure are not considered projections.

[W] TABLE R302.1(1)
EXTERIOR WALLS

EXTERIOR WALL ELEMENT		MINIMUM FIRE-RESISTANCE RATING	MINIMUM FIRE SEPARATION DISTANCE
Walls	Fire-resistance rated	1 hour—tested in accordance with ASTM E119, UL 263 or Section 703.3 of the *International Building Code* with exposure from both sides	0 feet
	Not fire-resistance rated	0 hours	≥ 5 feet
Projections	Not allowed	NA	< 2 feet
	Fire-resistance rated	1 hour on the underside, or heavy timber, or fire-retardant-treated wood[a, b]	≥ 2 feet to < 5 feet
	Not fire-resistance rated	0 hours	≥ 5 feet
Openings in walls	Not allowed	NA	< 3 feet
	25% maximum of wall area	0 hours	3 feet
	Unlimited	0 hours	5 feet
Penetrations	All	Comply with Section R302.4	< 3 feet
		None required	3 feet

For SI: 1 foot = 304.8 mm.
NA = Not Applicable.

a. The fire-resistance rating shall be permitted to be reduced to 0 hours on the underside of the eave overhang if fireblocking is provided from the wall top plate to the underside of the roof sheathing.

b. The fire-resistance rating shall be permitted to be reduced to 0 hours on the underside of the rake overhang where ((~~gable vent~~)) ventilation openings are not installed in the rake overhang or in walls that are common to attic areas.

[W] TABLE R302.1(2)
EXTERIOR WALLS—DWELLINGS WITH FIRE SPRINKLERS

EXTERIOR WALL ELEMENT		MINIMUM FIRE-RESISTANCE RATING	MINIMUM FIRE SEPARATION DISTANCE
Walls	Fire-resistance rated	1 hour—tested in accordance with ASTM E119, UL 263 or Section 703.3 of the *International Building Code* with exposure from the outside	0 feet
	Not fire-resistance rated	0 hours	3 feet[a]
Projections	Not allowed	NA	< 2 feet
	Fire-resistance rated	1 hour on the underside, or heavy timber, or fire-retardant-treated wood[b, c]	2 feet[a]
	Not fire-resistance rated	0 hours	3 feet
Openings in walls	Not allowed	NA	< 3 feet
	Unlimited	0 hours	3 feet[a]
Penetrations	All	Comply with Section R302.4	< 3 feet
		None required	3 feet[a]

For SI: 1 foot = 304.8 mm.
NA = Not Applicable.

a. For residential subdivisions where all dwellings are equipped throughout with an automatic sprinkler system installed in accordance with Section P2904, the fire separation distance for exterior walls not fire-resistance rated and for fire-resistance-rated projections shall be permitted to be reduced to 0 feet, and unlimited unprotected openings and penetrations shall be permitted, where the adjoining lot provides an open setback yard that is 6 feet or more in width on the opposite side of the property line.

b. The fire-resistance rating shall be permitted to be reduced to 0 hours on the underside of the eave overhang if fireblocking is provided from the wall top plate to the underside of the roof sheathing.

c. The fire-resistance rating shall be permitted to be reduced to 0 hours on the underside of the rake overhang where ((~~gable vent~~)) ventilation openings are not installed in the rake overhang or in walls that are common to attic areas.

[W] R302.2 Townhouses. Walls separating townhouse units shall be constructed in accordance with Section R302.2.1 or R302.2.2.

[W] R302.2.1 Double walls. Each townhouse unit shall be separated from other *townhouse units* by two 1-hour fire-resistance-rated wall assemblies tested in accordance with ASTM E119, UL 263 or Section 703.3 of the *International Building Code.*

[W] R302.2.2 Common walls. Common walls separating ((~~*townhouses*~~)) *townhouse units* shall be assigned a fire-resistance rating in accordance with Item 1 or 2. The common wall shared by two ((~~*townhouses*~~)) *townhouse units* shall be constructed

DRAFT

without plumbing or mechanical equipment, ducts or vents in the cavity of the common wall. The wall shall be rated for fire exposure from both sides and shall extend to and be tight against exterior walls and the underside of the roof sheathing. Electrical installations shall be in accordance with ((~~Chapters 34 through 43~~)) the Seattle Electrical Code. Penetrations of the membrane of common walls for electrical outlet boxes shall be in accordance with Section R302.4.

1. Where a fire sprinkler system in accordance with Section P2904 is provided, the common wall shall be not less than a 1-hour fire-resistance-rated wall assembly tested in accordance with ASTM E119, UL 263 or Section 703.3 of the *International Building Code*.
2. Where a fire sprinkler system in accordance with Section P2904 is not provided, the common wall shall be not less than a 2-hour fire-resistance-rated wall assembly tested in accordance with ASTM E119, UL 263 or Section 703.3 of the *International Building Code*.

   Exception: Common walls are permitted to extend to and be tight against the interior side of the exterior walls where voids in the exterior wall at the end of the common wall are *fireblocked*.

[W] R302.2.3 Continuity. The fire-resistance-rated wall or assembly separating ((~~*townhouses*~~)) *townhouse units* shall be continuous from the foundation to the underside of the roof sheathing, deck or slab. The fire-resistance rating shall extend the full length of the wall or assembly, including wall extensions through and separating attached enclosed *accessory structures*.

Where a story extends beyond the exterior wall of a story below:

1. The fire-resistance-rated wall or assembly shall extend to the outside edge of the upper story (see Figure R302.2(1)); or
2. The underside of the exposed floor-ceiling assembly shall be protected as required for projections in Section R302 (see Figure R302.2(2)).

[W] R302.2.4 Parapets for townhouses. Parapets constructed in accordance with Section R302.2.5 shall be constructed for *townhouses* as an extension of exterior walls or common walls separating *townhouse units* in accordance with the following:

1. Where roof surfaces adjacent to the wall or walls are at the same elevation, the parapet shall extend not less than 30 inches (762 mm) above the roof surfaces.
2. Where roof surfaces adjacent to the wall or walls are at different elevations and the higher roof is not more than 30 inches (762 mm) above the lower roof, the parapet shall extend not less than 30 inches (762 mm) above the lower roof surface.

   Exception: A parapet is not required in the preceding two cases where the roof covering complies with a minimum Class C rating as tested in accordance with ASTM E108 or UL 790 and the roof decking or sheathing is of noncombustible materials or fire-retardant-treated wood for a distance of 4 feet (1219 mm) on each side of the wall or walls, or one layer of 5/8-inch (15.9 mm) Type X gypsum board is installed directly beneath the roof decking or sheathing, supported by not less than nominal 2-inch (51 mm) ledgers attached to the sides of the roof framing members, for a distance of not less than 4 feet (1219 mm) on each side of the wall or walls and any openings or penetrations in the roof are not within 4 feet (1219 mm) of the common walls. Fire-retardant-treated wood shall meet the requirements of Sections R802.1.5 and R803.2.1.2.
3. A parapet is not required where roof surfaces adjacent to the wall or walls are at different elevations and the higher roof is more than 30 inches (762 mm) above the lower roof. The common wall construction from the lower roof to the underside of the higher roof deck shall have not less than a 1-hour fire-resistance rating. The wall shall be rated for exposure from both sides.

DRAFT

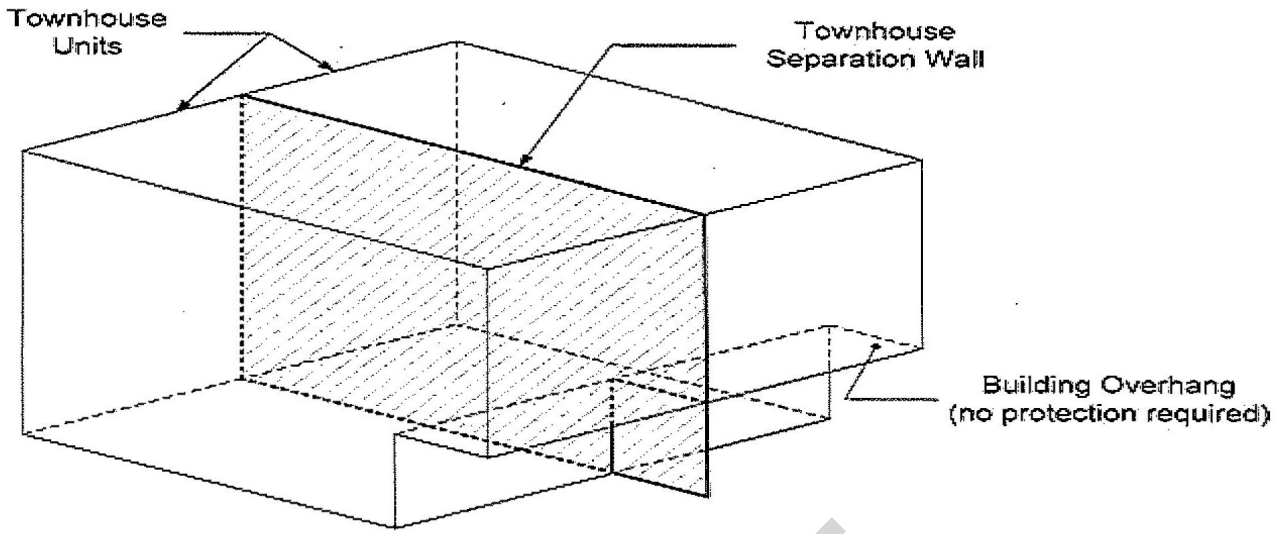

[W] FIGURE R302.2(1)
EXTENDED TOWNHOUSE SEPARATION WALL

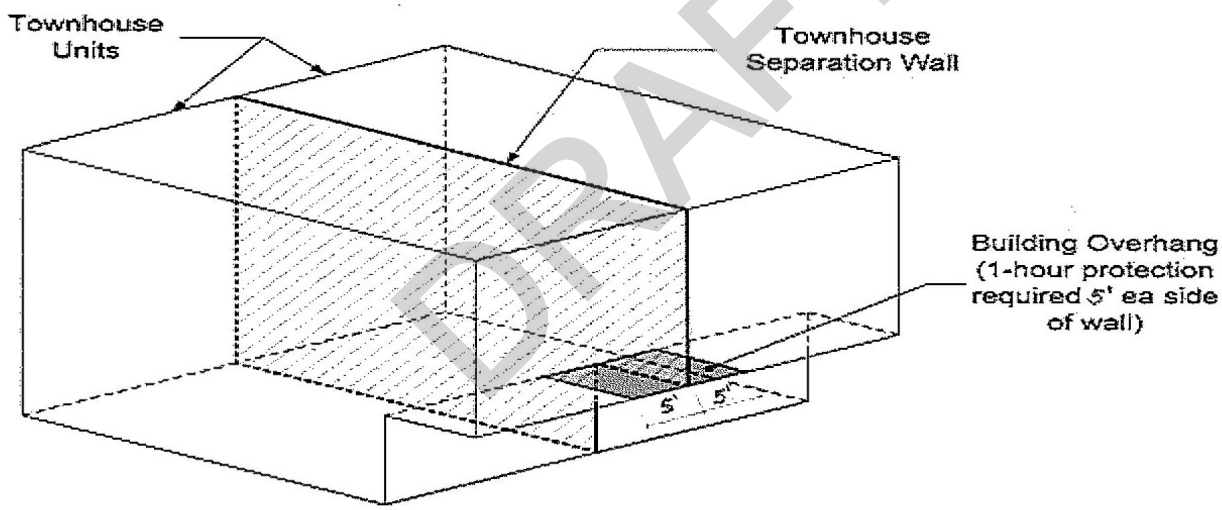

FIGURE R302.2(2)
TOWNHOUSE SEPARATION OVERHANG PROTECTION

[W] FIGURE R302.2(2)
TOWNHOUSE SEPARATION OVERHANG PROTECTION

DRAFT

R302.2.5 Parapet construction. Parapets shall have the same fire-resistance rating as that required for the supporting wall or walls. On any side adjacent to a roof surface, the parapet shall have noncombustible faces for the uppermost 18 inches (457 mm), to include counterflashing and coping materials. Where the roof slopes toward a parapet at slopes greater than 2 units vertical in 12 units horizontal (16.7-percent slope), the parapet shall extend to the same height as any portion of the roof within a distance of 3 feet (914 mm), and the height shall be not less than 30 inches (762 mm).

[W] ((~~R302.2.6 Structural independence.~~ ~~Each individual *townhouse* shall be structurally independent.~~

~~**Exceptions:**~~

~~1. Foundations supporting *exterior walls* or common walls.~~

~~2. Structural roof and wall sheathing from each unit fastened to the common wall framing.~~

~~3. Nonstructural wall and roof coverings.~~

~~4. Flashing at termination of roof covering over common wall.~~

~~5. *Townhouses* separated by a common wall as provided in Section R302.2.2, Item 1 or 2.~~))

[W] R302.3 Two-family dwellings. Wall and floor/ceiling assemblies separating dwelling units in two-family dwellings shall be constructed in accordance with Section R302.3.1 or R302.3.3. One accessory dwelling unit constructed within an existing dwelling unit need not be considered a separated dwelling unit in a two-family dwelling where all required smoke alarms, in the accessory dwelling unit and the primary dwelling unit, are interconnected in such a manner that the actuation of one alarm will activate all alarms in both the primary dwelling unit and the accessory dwelling unit.

Interpretation I302.3: An accessory dwelling unit being added to an existing dwelling unit that does not comply with the conditions of R302.3 shall be considered and regulated as a portion of a duplex.

[W][S] R302.3.1 *Dwelling units* in two-family dwellings shall be separated from each other by wall and floor assemblies having not less than a 1-hour fire-resistance rating where tested in accordance with ASTM E119, UL 263 or Section 703.3 of the *International Building Code*. ((~~Fire-resistance-rated floor/ceiling and wall assemblies shall extend to and be tight against the *exterior wall*, and wall assemblies shall extend from the foundation to the underside of the roof sheathing.~~))

((~~Exceptions~~)) Exception: ((~~1.~~)) A fire-resistance rating of 1/2 hour shall be permitted in buildings equipped throughout with an automatic sprinkler system installed in accordance with NFPA 13.

[W] R302.3.2 Fire-resistance-rated floor/ceiling and wall assemblies shall extend to and be tight against the exterior wall, and wall assemblies shall extend from the foundation to the underside of the roof sheathing.

((~~2.~~)) **Exception:** Wall assemblies need not extend through *attic* spaces where the ceiling is protected by not less than 5/8-inch (15.9 mm) Type X gypsum board, an *attic* draft stop constructed as specified in Section R302.12.1 is provided above and along the wall assembly separating the *dwellings* and the structural framing supporting the ceiling is protected by not less than 1/2-inch (12.7 mm) gypsum board or equivalent.

[W][S] ((~~R302.3.1~~)) R302.3.3 Supporting construction. Where floor/ceiling assemblies are required to be fire-resistance rated by Section R302.3, the supporting construction of such assemblies shall have an equal or greater fire-resistance rating.

Exception: The supporting construction is not required to be fire-resistance rated where automatic fire sprinklers are installed in accordance with Section P2904 in both *dwelling units*.

R302.4 Dwelling unit rated penetrations. Penetrations of wall or floor-ceiling assemblies required to be fire-resistance rated in accordance with Section R302.2 or R302.3 shall be protected in accordance with this section.

[W] R302.4.1 Through penetrations. Through penetrations of fire-resistance-rated wall or floor assemblies shall comply with Section R302.4.1.1 or R302.4.1.2.

Exception: Where the penetrating items are steel, ferrous or copper pipes, tubes or conduits, or fire sprinkler piping, the annular space shall be protected as follows:

1. In concrete or masonry wall or floor assemblies, concrete, grout or mortar shall be permitted where installed to the full thickness of the wall or floor assembly or the thickness required to maintain the fire-resistance rating, provided that both of the following are complied with:
   1.1. The nominal diameter of the penetrating item is not more than 6 inches (152 mm).
   1.2. The area of the opening through the wall does not exceed 144 square inches (92 900 mm^2).
2. The material used to fill the annular space shall prevent the passage of flame and hot gases sufficient to ignite cotton waste where subjected to ASTM E119 or UL 263 time temperature fire conditions under a positive pressure differential of not less than 0.01 inch of water (3 Pa) at the location of the penetration for the time period equivalent to the fire-resistance rating of the construction penetrated.

DRAFT

1. Ceiling is suspended under the floor framing.
2. Floor framing is constructed of truss-type open-web or perforated members.

R302.12.1 Materials. Draftstopping materials shall be not less than 1/2-inch (12.7 mm) gypsum board, 3/8-inch (9.5 mm) wood structural panels or other *approved* materials adequately supported. Draftstopping shall be installed parallel to the floor framing members unless otherwise *approved* by the *building official*. The integrity of the draftstops shall be maintained.

[W] R302.13 Fire protection of floors. Floor assemblies that are not required elsewhere in this code to be fire-resistance rated, shall be provided with a 1/2-inch (12.7 mm) gypsum wallboard membrane, 5/8-inch (16 mm) wood structural panel membrane, or equivalent on the underside of the floor framing member. Penetrations or openings for ducts, vents, electrical outlets, lighting, devices, luminaires, wires, speakers, drainage, piping and similar openings or penetrations shall be permitted.

Exceptions:

1. Floor assemblies located directly over a space protected by an automatic sprinkler system in accordance with ((~~Section P2904~~)) Appendix U, NFPA 13D, or other approved equivalent sprinkler system.
2. Floor assemblies located directly over a crawl space not intended for storage or ((~~for the installation of~~)) fuel-fired ((~~or electric-powered heating~~)) appliances.
3. Portions of floor assemblies shall be permitted to be unprotected where complying with the following:
   3.1. The aggregate area of the unprotected portions does not exceed 80 square feet (7.4 m^2) per story.
   3.2. Fireblocking in accordance with Section R302.11.1 is installed along the perimeter of the unprotected portion to separate the unprotected portion from the remainder of the floor assembly.
4. Wood floor assemblies using dimension lumber or structural composite lumber with a cross sectional area equal to or greater than 2-inch by 10-inch (50.8 mm by 254 mm) nominal dimension, or other approved floor assemblies demonstrating equivalent fire performance.

[S] R302.14 Combustible insulation clearance. Combustible insulation shall be separated not less than 3 inches (76 mm) from recessed luminaires, fan motors and other heat-producing devices.

Exception: Where heat-producing devices are *listed* for lesser clearances, combustible insulation complying with 3the listing requirements shall be separated in accordance with the conditions stipulated in the listing.

Recessed luminaires installed in the *building thermal envelope* shall meet the requirements of ((~~Section N1102.4.5 of this code~~)) the *Seattle Energy Code*.

DRAFT

SECTION R303
LIGHT, VENTILATION AND HEATING

[W] R303.1 ((~~Habitable rooms~~)) Natural light. ((~~Habitable~~)) All habitable rooms shall have an aggregate glazing area of not less than 8 percent of the floor area of such rooms. ((~~Natural *ventilation* shall be through windows, skylights, doors, louvers or other *approved* openings to the outdoor air. Such openings shall be provided with ready access or shall otherwise be readily controllable by the building occupants. The openable area to the outdoors shall be not less than 4 percent of the floor area being ventilated.~~))

((~~Exceptions~~)) Exception:

((~~1. The glazed areas need not be openable where the opening is not required by Section R310 and a whole-house mechanical *ventilation* system is installed in accordance with Section M1505.~~))

2. The glazed areas need not be installed in rooms where ((~~Exception 1 is satisfied and~~)) artificial light is provided that is capable of producing an average illumination of 6 footcandles (65 lux) over the area of the room at a height of 30 inches (762 mm) above the floor level.

((~~3. Use of sunroom and patio covers, as defined in Section R202, shall be permitted for natural *ventilation* if in excess of 40 percent of the exterior sunroom walls are open, or are enclosed only by insect screening.~~))

[W] R303.2 Adjoining rooms. For the purpose of determining light ((~~and *ventilation*~~)) requirements, rooms shall be considered to be a portion of an adjoining room where not less than one-half of the area of the common wall is open and unobstructed and provides an opening of not less than one-tenth of the floor area of the interior room and not less than 25 square feet (2.3 m^2).

Exception: Openings required for light ((~~or *ventilation*~~)) shall be permitted to open into a sunroom with thermal isolation or a patio cover, provided that there is an openable area between the adjoining room and the sunroom or patio cover of not less than one-tenth of the floor area of the interior room and not less than 20 square feet (2 m^2). ((~~The minimum openable area to the outdoors shall be based on the total floor area being ventilated.~~))

[W] ((~~R303.3 Bathrooms.~~ ~~Bathrooms, water closet compartments and other similar rooms shall be provided with aggregate glazing area in windows of not less than 3 square feet (0.3 m^2), one-half of which shall be openable.~~

~~**Exception:** The glazed areas shall not be required where artificial light and a local exhaust system are provided. The minimum local exhaust rates shall be determined in accordance with Section M1505. Exhaust air from the space shall be exhausted directly to the outdoors.~~))

~~**R303.4 Mechanical ventilation.** Where the air infiltration rate of a *dwelling unit* is 5 air changes per hour or less where tested with a blower door at a pressure of 0.2 inch w.c (50 Pa) in accordance with Section N1102.4.1.2, the *dwelling unit* shall be provided with whole-house mechanical ventilation in accordance with Section M1505.4.~~))

[W] R303.4 Minimum ventilation performance. *Dwelling units* shall be equipped with *local exhaust* and *whole house ventilation systems* designed and installed as specified in Section M1507.

Exception: Additions with less than 500 square feet of conditioned floor area are exempt from the requirements for *whole house mechanical ventilation systems*.

R303.5 Opening location. Outdoor intake and exhaust openings shall be located in accordance with Sections R303.5.1 and R303.5.2.

[W] R303.5.1 Intake openings. Mechanical and gravity outdoor air intake openings shall be located not less than 10 feet (3048 mm) from any hazardous or noxious contaminant, such as vents, chimneys, plumbing vents, streets, alleys, parking lots and loading docks, except as otherwise specified in this code.

For the purpose of this section, the exhaust from *dwelling* unit toilet rooms, bathrooms and kitchens shall not be considered as hazardous or noxious.

Exceptions:

1. The 10-foot (3048 mm) separation is not required where the intake opening is located 3 feet (914 mm) or greater below the contaminant source.
2. Vents and chimneys serving fuel-burning appliances shall be terminated in accordance with the applicable provisions of Chapters 18 and 24.
3. Clothes dryer exhaust ducts shall be terminated in accordance with Section M1502.3.

[W] R303.5.2 Exhaust openings. Exhaust air shall not be directed onto walkways. All exhaust ducts shall terminate outside the building. Terminal elements shall have at least the equivalent net free area of the ductwork.

[W] R303.5.2.1 Exhaust ducts. Exhaust ducts shall be equipped with back-draft dampers. All exhaust ducts in unconditioned spaces shall be insulated to a minimum of R-4.

R303.6 Outside opening protection. Air exhaust and intake openings that terminate outdoors shall be protected with corrosion-resistant screens, louvers or grilles having an opening size of not less than 1/4 inch (6 mm) and a maximum opening size of 1/2 inch (13 mm), in any dimension. Openings shall be protected against local weather conditions. Outdoor air exhaust and intake openings shall meet the provisions for *exterior wall* opening protectives in accordance with this code.

[W] R303.7 Interior stairway illumination. Interior stairways shall be provided with an artificial light source to illuminate the landings and treads. Stairway illumination shall receive power from the building wiring. The light source shall be capable of illuminating treads and landings to levels of not less than 1 foot-candle (11 lux) as measured at the center of treads and landings. There shall be a wall switch at each floor level to control the light source where the stairway has six or more risers.

Exception: A switch is not required where remote, central or automatic control of lighting is provided.

[W] R303.8 Exterior stairway illumination. Exterior stairways shall be provided with an artificial light source located at the top landing of the stairway. Stairway illumination shall receive power from the building wiring. Exterior stairways providing access to a *basement* from the outdoor *grade* level shall be provided with an artificial light source located at the bottom landing of the stairway.

[W] R303.9 Required glazed openings. Required glazed openings shall open directly onto a street or public alley, or a *yard* or court located on the same *lot* as the building.

Exceptions:

1. Required glazed openings that face into a roofed porch where the porch abuts a street, *yard* or court ((~~and~~)) are permitted where the longer side of the porch is not less than 65 percent unobstructed and the ceiling height is not less than 7 feet (2134 mm).
2. Eave projections shall not be considered as obstructing the clear open space of a *yard* or court.
3. Required glazed openings that face into the area under a deck, balcony, bay or floor cantilever are permitted where ((~~a clear vertical space not less than 36 inches (914 mm) in height~~)) an unobstructed pathway of not less than 36 inches (914 mm) in height, 36 inches (914 mm) in width, and no greater than 60 inches (1524 mm) in length is provided and opens to a yard or court. The pathway shall be measured from the exterior face of the glazed opening, or if the glazed opening is in a window well, at the window well wall furthest from the exterior face of the glazed opening.

DRAFT

R303.9.1 Sunroom additions. Required glazed openings shall be permitted to open into sunroom *additions* or patio covers that abut a street, *yard* or court if in excess of 40 percent of the exterior sunroom walls are open, or are enclosed only by insect screening, and the ceiling height of the sunroom is not less than 7 feet (2134 mm).

[W][S] R303.10 Required heating. ((~~Where the winter design temperature in Table R301.2(1) is below 60°F (16°C), every~~)) Every *dwelling unit* shall be provided with heating facilities capable of maintaining a minimum room temperature of not less than 68°F (20°C) at a point 3 feet (914 mm) above the floor and 2 feet (610 mm) from exterior walls in habitable rooms, baths and toilet rooms at the design temperature as specified in Table R301.2(1). The installation of one or more portable space heaters shall not be used to achieve compliance with this section.

Exception: Unheated recreational tents or yurts not exceeding 500 square feet provided they are not occupied as a permanent dwelling.

Interpretation R303.10: Accessory *dwelling units* shall be provided with heating controls separate from the primary *dwelling unit.*

[W] R303.10.1 Definitions. For the purposes of this section only, the following definitions apply.

DESIGNATED AREAS. Those areas designated by a county to be an urban growth area in chapter 36.70A RCW and those areas designated by the U.S. Environmental Protection Agency as being in nonattainment for particulate matter.

SUBSTANTIALLY REMODELED. Any *alteration* or restoration of a building exceeding 60 percent of the appraised value of such building within a 12 month period. For the purpose of this section, the appraised value is the estimated cost to replace the building and structure in kind, based on current replacement costs.

[W] R303.10.2 Primary heating source. Primary heating sources in all new and substantially remodeled buildings in designated areas shall not be dependent upon wood stoves.

[W] R303.10.3 Solid fuel burning devices. No new or used solid fuel burning device shall be installed in new or existing buildings unless such device is United States Environmental Protection Agency certified or exempt from certification by the United States Environmental Protection Agency and conforms with RCW 70.94.011, 70.94.450, 70.94.453 and 70.94.457.

Exceptions:

1. Wood cook stoves.
2. Antique wood heaters manufactured prior to 1940.

DRAFT

SECTION R304
MINIMUM ROOM AREAS

R304.1 Minimum area. Habitable rooms shall have a floor area of not less than 70 square feet (6.5 m^2).

Exception: Kitchens.

R304.2 Minimum dimensions. Habitable rooms shall be not less than 7 feet (2134 mm) in any horizontal dimension.

Exception: Kitchens.

R304.3 Height effect on room area. Portions of a room with a sloping ceiling measuring less than 5 feet (1524 mm) or a furred ceiling measuring less than 7 feet (2134 mm) from the finished floor to the finished ceiling shall not be considered as contributing to the minimum required habitable area for that room.

SECTION R305
CEILING HEIGHT

R305.1 Minimum height. *Habitable space*, hallways and portions of *basements* containing these spaces shall have a ceiling height of not less than 7 feet (2134 mm). Bathrooms, toilet rooms and laundry rooms shall have a ceiling height of not less than 6 feet 8 inches (2032 mm).

Exceptions:

1. For rooms with sloped ceilings, the required floor area of the room shall have a ceiling height of not less than 5 feet (1524 mm) and not less than 50 percent of the required floor area shall have a ceiling height of not less than 7 feet (2134 mm).
2. The ceiling height above bathroom and toilet room fixtures shall be such that the fixture is capable of being used for its intended purpose. A shower or tub equipped with a showerhead shall have a ceiling height of not less than 6 feet 8 inches (2032 mm) above an area of not less than 30 inches (762 mm) by 30 inches (762 mm) at the showerhead.

3. Beams, girders, ducts or other obstructions in *basements* containing *habitable space* shall be permitted to project to within 6 feet 4 inches (1931 mm) of the finished floor.

R305.1.1 Basements. Portions of *basements* that do not contain *habitable space* or hallways shall have a ceiling height of not less than 6 feet 8 inches (2032 mm).

Exception: At beams, girders, ducts or other obstructions, the ceiling height shall be not less than 6 feet 4 inches (1931 mm) from the finished floor.

SECTION R306
SANITATION

R306.1 Toilet facilities. Every *dwelling* unit shall be provided with a water closet, lavatory, and a bathtub or shower.

R306.2 Kitchen. Each *dwelling* unit shall be provided with a kitchen area and every kitchen area shall be provided with a sink.

R306.3 Sewage disposal. Plumbing fixtures shall be connected to a sanitary sewer or to an *approved* private sewage disposal system.

R306.4 Water supply to fixtures. Plumbing fixtures shall be connected to an *approved* water supply. Kitchen sinks, lavatories, bathtubs, showers, bidets, laundry tubs and washing machine outlets shall be provided with hot and cold water.

SECTION R307
TOILET, BATH AND SHOWER SPACES

[W] R307.1 Space required. Fixtures shall be spaced in accordance with Figure R307.1, and in accordance with the requirements of ((~~Section P2705.1~~)) *Uniform Plumbing Code* Section 402.5.

DRAFT

R308.6.5 Screens not required. Screens shall not be required where fully tempered glass is used as single glazing or the inboard pane in multiple glazing and either of the following conditions are met:

1. The glass area is 16 square feet (1.49 m^2) or less; the highest point of glass is not more than 12 feet (3658 mm) above a walking surface; the nominal glass thickness is not more than 3/16 inch (4.8 mm); and (for multiple glazing only) the other pane or panes are fully tempered, laminated or wired glass.
2. The glass area is greater than 16 square feet (1.49 m^2); the glass is sloped 30 degrees (0.52 rad) or less from vertical; and the highest point of glass is not more than 10 feet (3048 mm) above a walking surface.

R308.6.6 Glass in greenhouses. Any glazing material is permitted to be installed without screening in the sloped areas of greenhouses, provided that the greenhouse height at the ridge does not exceed 20 feet (6096 mm) above *grade*.

R308.6.7 Screen characteristics. The screen and its fastenings shall be capable of supporting twice the weight of the glazing, be firmly and substantially fastened to the framing members, and have a mesh opening of not more than 1 inch by 1 inch (25 mm by 25 mm).

R308.6.8 Curbs for skylights. Unit skylights installed in a roof with a pitch of less than three units vertical in 12 units horizontal (25-percent slope) shall be mounted on a curb extending not less than 4 inches (102 mm) above the plane of the roof, unless otherwise specified in the manufacturer's installation instructions.

R308.6.9 Testing and labeling. Unit skylights and tubular daylighting devices shall be tested by an *approved* independent laboratory, and bear a *label* identifying manufacturer, performance grade rating and *approved* inspection agency to indicate compliance with the requirements of AAMA/WDMA/CSA 101/I.S.2/A440.

R308.6.9.1 Comparative analysis for glass-glazed unit skylights. Structural wind load design pressures for glass-glazed unit skylights different than the size tested in accordance with Section R308.6.9 shall be permitted to be different than the design value of the tested unit where determined in accordance with one of the following comparative analysis methods:

1. Structural wind load design pressures for glass-glazed unit skylights smaller than the size tested in accordance with Section R308.6.9 shall be permitted to be higher than the design value of the tested unit provided that such higher pressures are determined by accepted engineering analysis. Components of the smaller unit shall be the same as those of the tested unit. Such calculated design pressures shall be validated by an additional test of the glass-glazed unit skylight having the highest allowable design pressure.
2. In accordance with WDMA I.S. 11.

DRAFT

SECTION R309
GARAGES AND CARPORTS

R309.1 Floor surface. Garage floor surfaces shall be of *approved* noncombustible material.

The area of floor used for parking of automobiles or other vehicles shall be sloped to facilitate the movement of liquids to a drain or toward the main vehicle entry doorway.

R309.2 Carports. Carports shall be open on not less than two sides. Carport floor surfaces shall be of *approved* noncombustible material. Carports not open on two or more sides shall be considered to be a garage and shall comply with the provisions of this section for garages.

The area of floor used for parking of automobiles or other vehicles shall be sloped to facilitate the movement of liquids to a drain or toward the main vehicle entry doorway.

Exception: Asphalt surfaces shall be permitted at ground level in carports.

R309.3 Flood hazard areas. For buildings located in flood hazard areas as established by Table R301.2(1), garage floors shall be one of the following:

1. Elevated to or above the design flood elevation as determined in accordance with Section R322.
2. Located below the design flood elevation provided that the floors are at or above *grade* on not less than one side, are used solely for parking, building access or storage, meet the requirements of Section R322 and are otherwise constructed in accordance with this code.

R309.4 Automatic garage door openers. Automatic garage door openers, if provided, shall be *listed* and *labeled* in accordance with UL 325.

[S] ((~~R309.5 Fire sprinklers.~~ ~~Private garages shall be protected by fire sprinklers where the garage wall has been designed based on Table R302.1(2), Note a. Sprinklers in garages shall be connected to an automatic sprinkler system that complies with Section P2904. Garage sprinklers shall be residential sprinklers or quick response sprinklers, designed to provide a density of 0.05 gpm/ft^2. Garage doors shall not be considered obstructions with respect to sprinkler placement.~~))

SECTION R310
EMERGENCY ESCAPE AND RESCUE OPENINGS

[W] R310.1 Emergency escape and rescue opening required. *Basements, habitable attics* and every sleeping room shall have not less than one operable emergency escape and rescue opening. Where *basements* contain one or more sleeping rooms, an emergency escape and rescue opening shall be required in each sleeping room. Emergency escape and rescue openings shall open directly into a public way, or to a *yard* or court providing an unobstructed path with a width of not less than 36 inches (914 mm) that opens to a public way.

Exceptions:

1. Storm shelters and *basements* used only to house mechanical *equipment* not exceeding a total floor area of 200 square feet (18.58 m^2).
2. Where the *dwelling unit* or *townhouse unit* is equipped with an automatic sprinkler system installed in accordance with Section P2904, sleeping rooms in basements shall not be required to have emergency escape and rescue openings provided that the basement has one of the following:
   - 2.1. One means of egress complying with Section R311 and one emergency escape and rescue opening.
   - 2.2. Two means of egress complying with Section R311.

[W] R310.1.1 Operational constraints and opening control devices. Emergency escape and rescue openings shall be operational from the inside of the room without the use of keys, tools or special knowledge. Window opening control devices on windows serving as a required emergency escape and rescue opening shall be not more than 70 inches (177.8 cm) above the finished floor and shall comply with ASTM F2090.

R310.2 Emergency escape and rescue openings. Emergency escape and rescue openings shall have minimum dimensions as specified in this section.

R310.2.1 Minimum opening area. Emergency escape and rescue openings shall have a net clear opening of not less than 5.7 square feet (0.530 m^2). The net clear opening dimensions required by this section shall be obtained by the normal operation of the emergency escape and rescue opening from the inside. The net clear height of the opening shall be not less than 24 inches (610 mm) and the net clear width shall be not less than 20 inches (508 mm).

Exception: *Grade* floor openings or below-*grade* openings shall have a net clear opening area of not less than 5 square feet (0.465 m^2).

R310.2.2 Window sill height. Where a window is provided as the emergency escape and rescue opening, it shall have a sill height of not more than 44 inches (1118 mm) above the floor; where the sill height is below *grade*, it shall be provided with a window well in accordance with Section R310.2.3.

R310.2.3 Window wells. The horizontal area of the window well shall be not less than 9 square feet (0.9 m^2), with a horizontal projection and width of not less than 36 inches (914 mm). The area of the window well shall allow the emergency escape and rescue opening to be fully opened.

Exception: The ladder or steps required by Section R310.2.3.1 shall be permitted to encroach not more than 6 inches (152 mm) into the required dimensions of the window well.

R310.2.3.1 Ladder and steps. Window wells with a vertical depth greater than 44 inches (1118 mm) shall be equipped with a permanently affixed ladder or steps usable with the window in the fully open position. Ladders or steps required by this section shall not be required to comply with Section R311.7. Ladders or rungs shall have an inside width of not less than 12 inches (305 mm), shall project not less than 3 inches (76 mm) from the wall and shall be spaced not more than 18 inches (457 mm) on center vertically for the full height of the window well.

R310.2.3.2 Drainage. Window wells shall be designed for proper drainage by connecting to the building's foundation drainage system required by Section R405.1 or by an approved alternative method.

Exception: A drainage system for window wells is not required where the foundation is on well-drained soil or sand-gravel mixture soils in accordance with the United Soil Classification System, Group I Soils, as detailed in Table R405.1.

[W] R310.2.4 Emergency escape and rescue openings under decks and porches. Emergency escape and rescue openings installed under decks and porches shall be fully openable and ((~~provide a path~~)) provided with an unobstructed pathway of not less than 36 inches (914 mm) in height, 36 inches (914 mm) in width, and no greater than 60 inches (1524 mm) in length that opens to a *yard* or court. The pathway shall be measured from the exterior face of the glazed opening, or if the glazed opening is in a window well, at the window well wall furthest from the exterior face of the glazed opening.

R310.2.5 Replacement windows. Replacement windows installed in buildings meeting the scope of this code shall be exempt from the maximum sill height requirements of Section R310.2.2 and the requirements of Section R310.2.1, provided that the replacement window meets the following conditions:

DRAFT

R311.3.1 Floor elevations at the required egress doors. Landings or finished floors at the required egress door shall be not more than 1-1/2 inches (38 mm) lower than the top of the threshold.

Exception: The landing or floor on the exterior side shall be not more than 7-3/4 inches (196 mm) below the top of the threshold provided that the door does not swing over the landing or floor.

Where exterior landings or floors serving the required egress door are not at *grade*, they shall be provided with access to *grade* by means of a ramp in accordance with Section R311.8 or a stairway in accordance with Section R311.7.

R311.3.2 Floor elevations at other exterior doors. Doors other than the required egress door shall be provided with landings or floors not more than 7-3/4 inches (196 mm) below the top of the threshold.

Exception: A top landing is not required where a stairway of not more than two risers is located on the exterior side of the door, provided that the door does not swing over the stairway.

R311.3.3 Storm and screen doors. Storm and screen doors shall be permitted to swing over exterior stairs and landings.

[W] R311.4 Vertical egress. Egress from habitable levels including habitable attics and *basements* that are not provided with an egress door in accordance with Section R311.2 shall be by a ramp in accordance with Section R311.8 or a stairway in accordance with Section R311.7.

Exception: Stairs or ladders inside an individual *dwelling unit* used for access to areas of 200 square feet (18.6 m^2) or less, and not containing the primary bathroom or kitchen.

R311.5 Landing, deck, balcony and stair construction and attachment. Exterior landings, decks, balconies, stairs and similar facilities shall be positively anchored to the primary structure to resist both vertical and lateral forces or shall be designed to be self-supporting. Attachment shall not be accomplished by use of toenails or nails subject to withdrawal.

R311.6 Hallways. The width of a hallway shall be not less than 3 feet (914 mm).

R311.7 Stairways.

R311.7.1 Width. Stairways shall be not less than 36 inches (914 mm) in clear width at all points above the permitted handrail height and below the required headroom height. The clear width of stairways at and below the handrail height, including treads and landings, shall be not less than 31-1/2 inches (787 mm) where a handrail is installed on one side and 27 inches (698 mm) where handrails are installed on both sides.

Exception: The width of spiral stairways shall be in accordance with Section R311.7.10.1.

R311.7.2 Headroom. The headroom in stairways shall be not less than 6 feet 8 inches (2032 mm) measured vertically from the sloped line adjoining the tread nosing or from the floor surface of the landing or platform on that portion of the stairway.

Exceptions:

1. Where the nosings of treads at the side of a flight extend under the edge of a floor opening through which the stair passes, the floor opening shall not project horizontally into the required headroom more than 4-3/4 inches (121 mm).
2. The headroom for spiral stairways shall be in accordance with Section R311.7.10.1.

R311.7.3 Vertical rise. A flight of stairs shall not have a vertical rise larger than ((~~151 inches~~)) 12 feet 7 inches (3835 mm) between floor levels or landings.

R311.7.4 Walkline. The walkline across winder treads and landings shall be concentric to the turn and parallel to the direction of travel entering and exiting the turn. The walkline shall be located 12 inches (305 mm) from the inside of the turn. The 12-inch (305 mm) dimension shall be measured from the widest point of the clear stair width at the walking surface. Where winders are adjacent within a flight, the point of the widest clear stair width of the adjacent winders shall be used.

R311.7.5 Stair treads and risers. Stair treads and risers shall meet the requirements of this section. For the purposes of this section, dimensions and dimensioned surfaces shall be exclusive of carpets, rugs or runners.

R311.7.5.1 Risers. The riser height shall be not more than 7-3/4 inches (196 mm). The riser shall be measured vertically between leading edges of the adjacent treads. The greatest riser height within any flight of stairs shall not exceed the smallest by more than 3/8 inch (9.5 mm). Risers shall be vertical or sloped from the underside of the nosing of the tread above at an angle not more than 30 degrees (0.51 rad) from the vertical. At open risers, openings located more than 30 inches (762 mm), as measured vertically, to the floor or grade below shall not permit the passage of a 4-inch-diameter (102 mm) sphere.

Exceptions:

1. The opening between adjacent treads is not limited on spiral stairways.
2. The riser height of spiral stairways shall be in accordance with Section R311.7.10.1.

R311.7.5.2 Treads. The tread depth shall be not less than 10 inches (254 mm). The tread depth shall be measured horizontally between the vertical planes of the foremost projection of adjacent treads and at a right angle to the tread's leading edge. The greatest tread depth within any flight of stairs shall not exceed the smallest by more than 3/8 inch (9.5 mm).

DRAFT

SECTION R313
AUTOMATIC FIRE SPRINKLER SYSTEMS

[W][S] R313.1 Townhouse automatic fire sprinkler systems. An automatic residential fire sprinkler system shall be installed in *((~~townhouses~~))* a *townhouse unit*.

Exception: An automatic residential fire sprinkler system shall not be required where *additions* or *alterations* are made to an existing ((~~*townhouses*~~)) *townhouse unit* that does not have an automatic residential fire sprinkler system installed.

[W] R313.1.1 Design and installation. Automatic residential fire sprinkler systems for ((~~*townhouses*~~)) a *townhouse unit* shall be designed and installed in accordance with Section P2904 or NFPA 13D.

[W] ((~~R313.2 One- and two-family dwellings automatic fire sprinkler systems.~~ ~~An automatic residential fire sprinkler system shall be installed in one- and two-family *dwellings*.~~

~~**Exception:** An automatic residential fire sprinkler system shall not be required for *additions* or *alterations* to existing buildings that are not already provided with an automatic residential sprinkler system.~~

~~**R313.2.1 Design and installation.** Automatic residential fire sprinkler systems shall be designed and installed in accordance with Section P2904 or NFPA 13D.~~))

SECTION R314
SMOKE ALARMS

[W] R314.1 General. Smoke alarms, heat detectors, and heat alarms shall comply with NFPA 72 and Section R314.

[W] R314.1.1 Listings. Smoke alarms shall be *listed* in accordance with UL 217. Heat detectors and heat alarms shall be listed for the intended application. Combination smoke and carbon monoxide alarms shall be *listed* in accordance with UL 217 and UL 2034.

[W] R314.2 Where required. Smoke alarms, heat detectors, and heat alarms shall be provided in accordance with this section.

[W] R314.2.1 New construction. Smoke alarms shall be provided in *dwelling units*. A heat detector or heat alarm shall be provided in new attached garages.

[W] R314.2.2 Alterations, repairs and additions. Where *alterations*, *repairs* or *additions* requiring a permit occur, where one or more sleeping rooms are added or created in existing dwellings, or where an accessory dwelling unit is created within an existing dwelling unit, ((~~the individual~~)) each *dwelling unit* shall be equipped with smoke alarms ((~~located~~)) as required for new *dwellings*.

Exceptions:

1. Work involving the exterior surfaces of *dwellings*, such as the replacement of roofing or siding, the *addition* or replacement of windows or doors, or the addition of a porch or deck.
2. Installation, alteration or repairs of plumbing or mechanical systems.

[W] R314.2.3 New attached garages. A heat detector or heat alarm rated for the ambient outdoor temperatures and humidity shall be installed in new garages that are attached to or located under new and existing dwellings. Heat detectors and heat alarms shall be installed in a central location and in accordance with the manufacturer's instructions.

EXCEPTION: Heat detectors and heat alarms shall not be required in dwellings without commercial power.

[W] R314.3 Location. Smoke alarms shall be installed in the following locations:

1. In each sleeping room or sleeping loft.
2. Outside each separate sleeping area in the immediate vicinity of the bedrooms.
3. On each additional *story* of the *dwelling*, including *basements* and *habitable attics* and not including crawl spaces and uninhabitable *attics*. In *dwellings* or *dwelling units* with split levels and without an intervening door between the adjacent levels, a smoke alarm installed on the upper level shall suffice for the adjacent lower level provided that the lower level is less than one full *story* below the upper level.
4. Smoke alarms shall be installed not less than 3 feet (914 mm) horizontally from the door or opening of a bathroom that contains a bathtub or shower unless this would prevent placement of a smoke alarm required by this section.
5. In napping areas in *family home child care*.

R314.3.1 Installation near cooking appliances. Smoke alarms shall not be installed in the following locations unless this would prevent placement of a smoke alarm in a location required by Section R314.3.

1. Ionization smoke alarms shall not be installed less than 20 feet (6096 mm) horizontally from a permanently installed cooking *appliance*.

DRAFT

2. Ionization smoke alarms with an alarm-silencing switch shall not be installed less than 10 feet (3048 mm) horizontally from a permanently installed cooking *appliance*.
3. Photoelectric smoke alarms shall not be installed less than 6 feet (1828 mm) horizontally from a permanently installed cooking *appliance*.

[W] R314.4 Interconnection. Where more than one smoke alarm is required to be installed within an individual dwelling unit in accordance with Section ((~~R314.3~~)) R314.2, the alarm devices shall be interconnected in such a manner that the actuation of one alarm will activate all of the alarms in the individual *dwelling unit*. Where an accessory dwelling unit is created within an existing dwelling unit all required smoke alarms, in the accessory dwelling unit and the primary dwelling unit, shall be interconnected in such a manner that the actuation of one alarm will activate all alarms in both the primary dwelling unit and the accessory dwelling unit. Physical interconnection of smoke alarms shall not be required where listed wireless alarms are installed and all alarms sound upon activation of one alarm.

Exception: Smoke alarms and alarms installed to satisfy Section R314.4.1 shall not be required to be interconnected to existing smoke alarms where such existing smoke alarms are not interconnected or where such new smoke alarm or alarm is not capable of being interconnected to the existing smoke alarms.

R314.4.1 Heat detection interconnection. Heat detectors and heat alarms shall be connected to an alarm or a smoke alarm that is installed in the dwelling. Alarms and smoke alarms that are installed for this purpose shall be located in a hallway, room, or other location that will provide occupant notification.

R314.5 Combination alarms. Combination smoke and carbon monoxide alarms shall be permitted to be used in lieu of smoke alarms.

[W] R314.6 Power source. Smoke alarms, heat alarms, and heat detectors shall receive their primary power from the building wiring where such wiring is served from a commercial source and, where primary power is interrupted, shall receive power from a battery. Wiring shall be permanent and without a disconnecting switch other than those required for overcurrent protection.

Exceptions:

1. Smoke alarms shall be permitted to be battery operated where installed in buildings without commercial power.
2. Smoke alarms installed in accordance with Section R314.2.2 shall be permitted to be battery powered.

R314.7 Fire alarm systems. Fire alarm systems shall be permitted to be used in lieu of smoke alarms and shall comply with Sections R314.7.1 through R314.7.4.

R314.7.1 General. Fire alarm systems shall comply with the provisions of this code and the household fire warning *equipment* provisions of NFPA 72. Smoke detectors shall be *listed* in accordance with UL 268.

R314.7.2 Location. Smoke detectors shall be installed in the locations specified in Section R314.3.

R314.7.3 Permanent fixture. Where a household fire alarm system is installed, it shall become a permanent fixture of the occupancy, owned by the homeowner.

R314.7.4 Combination detectors. Combination smoke and carbon monoxide detectors shall be permitted to be installed in fire alarm systems in lieu of smoke detectors, provided that they are *listed* in accordance with UL 268 and UL 2075.

DRAFT

SECTION R315
CARBON MONOXIDE ALARMS

R315.1 General. Carbon monoxide alarms shall comply with Section R315.

R315.1.1 Listings. Carbon monoxide alarms shall be *listed* in accordance with UL 2034. Combination carbon monoxide and smoke alarms shall be *listed* in accordance with UL 2034 and UL 217.

[W] R315.2 Where required. Carbon monoxide alarms shall be provided in accordance with Sections R315.2.1 and R315.2.2.

[W] R315.2.1 New construction. For new construction, an *approved* carbon monoxide alarm((~~s~~)) shall be ((~~provided in dwelling units where either or both of the following conditions exist~~)) installed outside of each separate sleeping area in the immediate vicinity of the bedrooms in *dwelling units* and on each level of the dwelling in accordance with the manufacturer's recommendation.

((~~1. The *dwelling unit* contains a fuel-fired *appliance*.~~

~~2. The *dwelling unit* has an attached garage with an opening that communicates with the dwelling unit.~~))

[W] R315.2.2 Alterations, repairs and additions. ((~~Where *alterations*, *repairs* or *additions* requiring a permit occur, the individual *dwelling unit* shall be equipped with carbon monoxide alarms located as required for new *dwellings*.~~)) Existing dwellings shall be equipped with carbon monoxide alarms in accordance with Section R315.2.1. An inspection will occur where *alterations*, repairs, or additions requiring a permit occur, or where one or more sleeping rooms are added or created.

Exceptions:

1. Work involving the exterior surfaces of *dwellings*, such as the replacement of roofing or siding, or the addition or replacement of windows or doors, or the addition of a porch or deck, is exempt from the inspection requirements of this section.
2. Installation, alteration or repairs of non-fuel-burning plumbing, electrical or mechanical systems are exempt from the requirements of this section.
3. Owner-occupied single-family residences legally occupied before July 26, 2009. See RCW 19.27.530 (2)(b).

[W] R315.3 Location. Carbon monoxide alarms in *dwelling units* shall be installed outside of each separate sleeping area in the immediate vicinity of the bedrooms and on each level of the *dwelling* and in accordance with the manufacturer's recommendations. Where a fuel-burning *appliance* is located within a bedroom or its attached bathroom, a carbon monoxide alarm shall be installed within the bedroom.

R315.4 Combination alarms. Combination carbon monoxide and smoke alarms shall be permitted to be used in lieu of carbon monoxide alarms.

R315.5 Interconnectivity. Where more than one carbon monoxide alarm is required to be installed within an individual *dwelling unit* in accordance with Section R315.3, the alarm devices shall be interconnected in such a manner that the actuation of one alarm will activate all of the alarms in the individual *dwelling unit*. Physical interconnection of carbon monoxide alarms shall not be required where *listed* wireless alarms are installed and all alarms sound upon activation of one alarm.

Exception: Interconnection of carbon monoxide alarms in existing areas shall not be required where *alterations* or *repairs* do not result in removal of interior wall or ceiling finishes exposing the structure, unless there is an *attic*, crawl space or basement available that could provide access for interconnection without the removal of interior finishes.

R315.6 Power source. Carbon monoxide alarms shall receive their primary power from the building wiring where such wiring is served from a commercial source and, where primary power is interrupted, shall receive power from a battery. Wiring shall be permanent and without a disconnecting switch other than those required for overcurrent protection.

Exceptions:

1. Carbon monoxide alarms shall be permitted to be battery operated where installed in buildings without commercial power.
2. Carbon monoxide alarms installed in accordance with Section R315.2.2 shall be permitted to be battery powered.

R315.7 Carbon monoxide detection systems. Carbon monoxide detection systems shall be permitted to be used in lieu of carbon monoxide alarms and shall comply with Sections R315.7.1 through R315.7.4.

R315.7.1 General. Household carbon monoxide detection systems shall comply with NFPA 720. Carbon monoxide detectors shall be *listed* in accordance with UL 2075.

R315.7.2 Location. Carbon monoxide detectors shall be installed in the locations specified in Section R315.3. These locations supersede the locations specified in NFPA 720.

R315.7.3 Permanent fixture. Where a household carbon monoxide detection system is installed, it shall become a permanent fixture of the occupancy and owned by the homeowner.

R315.7.4 Combination detectors. Combination carbon monoxide and smoke detectors installed in carbon monoxide detection systems in lieu of carbon monoxide detectors shall be *listed* in accordance with UL 2075 and UL 268.

SECTION R316
FOAM PLASTIC

R316.1 General. The provisions of this section shall govern the materials, design, application, construction and installation of foam plastic materials.

R316.2 Labeling and identification. Packages and containers of foam plastic insulation and foam plastic insulation components delivered to the job site shall bear the *label* of an *approved agency* showing the manufacturer's name, the product listing, product identification and information sufficient to determine that the end use will comply with the requirements.

R316.3 Surface burning characteristics. Unless otherwise allowed in Section R316.5, foam plastic, or foam plastic cores used as a component in manufactured assemblies, used in building construction shall have a flame spread index of not more than 75 and shall have a smoke-developed index of not more than 450 when tested in the maximum thickness and density intended for use in accordance with ASTM E84 or UL 723. Loose-fill-type foam plastic insulation shall be tested as board stock for the flame spread index and smoke-developed index.

DRAFT

inspection over the quality of the product and that has been *approved* by an accreditation body that complies with the requirements of the American Lumber Standard Committee treated wood program.

R318.1.2 Field treatment. Field-cut ends, notches and drilled holes of pressure-preservative-treated wood shall be retreated in the field in accordance with AWPA M4.

R318.2 Chemical termiticide treatment. Chemical termiticide treatment shall include soil treatment or field-applied wood treatment. The concentration, rate of application and method of treatment of the chemical termiticide shall be in strict accordance with the termiticide *label*.

R318.3 Barriers. *Approved* physical barriers, such as metal or plastic sheeting or collars specifically designed for termite prevention, shall be installed in a manner to prevent termites from entering the structure. Shields placed on top of an exterior foundation wall shall be used only if in combination with another method of protection.

R318.4 Foam plastic protection. In areas where the probability of termite infestation is "very heavy" as indicated in Figure R301.2(7), extruded and expanded polystyrene, polyisocyanurate and other foam plastics shall not be installed on the exterior face or under interior or exterior foundation walls or slab foundations located below *grade*. The clearance between foam plastics installed above *grade* and exposed earth shall be not less than 6 inches (152 mm).

Exceptions:

1. Buildings where the structural members of walls, floors, ceilings and roofs are entirely of noncombustible materials or pressure-preservative-treated wood.
2. Where in *addition* to the requirements of Section R318.1, an *approved* method of protecting the foam plastic and structure from subterranean termite damage is used.
3. On the interior side of *basement walls*.

DRAFT

SECTION R319
SITE ADDRESS

[S] R319.1 Address identification. Buildings shall be provided with *approved* address identification. The address identification shall be legible and placed in a position that is visible from the street or road fronting the property. Address identification characters shall contrast with their background. Address numbers shall be Arabic numbers or alphabetical letters. Numbers shall not be spelled out. Each character shall be not less than 4 inches (102 mm) in height with a stroke width of not less than 0.5 inch (12.7 mm). Where required by the fire code official, address identification shall be provided in additional *approved* locations to facilitate emergency response. Where access is by means of a private road and the building address cannot be viewed from the public way, a monument, pole or other sign or means shall be used to identify the structure. Address identification shall be maintained.

Premises shall be identified in accordance with *International Building Code* Section 501.2.

SECTION R320
ACCESSIBILITY

R320.1 Scope. Where there are four or more *dwelling units* or sleeping units in a single structure, the provisions of Chapter 11 of the *International Building Code* for Group R-3 shall apply.

R320.1.1 Guestrooms. A *dwelling* with guestrooms shall comply with the provisions of Chapter 11 of the *International Building Code* for Group R-3. For the purpose of applying the requirements of Chapter 11 of the *International Building Code*, guestrooms shall be considered to be sleeping units.

Exception: Owner-occupied lodging houses with five or fewer guestrooms constructed in accordance with the *International Residential Code* are not required to be accessible.

SECTION R321
ELEVATORS AND PLATFORM LIFTS

R321.1 Elevators. Where provided, passenger elevators, limited-use and limited-application elevators or private residence elevators shall comply with ASME A17.1/CSA B44.

R321.2 Platform lifts. Where provided, platform lifts shall comply with ASME A18.1.

R321.3 Accessibility. Elevators or platform lifts that are part of an accessible route required by Chapter 11 of the *International Building Code*, shall comply with ICC A117.1.

SECTION R322
FLOOD-RESISTANT CONSTRUCTION

[S] R322.1 General. Buildings and structures constructed in whole or in part in flood hazard areas, including A or V Zones and Coastal A Zones, as established in Table R301.2(1) and areas of special flood hazard as defined in *Seattle Municipal Code* Section 25.06.030, and substantial improvement and repair of substantial damage of buildings and structures in flood hazard areas, shall be designed and constructed in accordance with the provisions contained in this section and *Seattle Municipal Code* Chapter 25.06, the Seattle Floodplain Development Ordinance. Buildings and structures that are located in more than one flood hazard area shall comply with the provisions associated with the most restrictive flood hazard area. Buildings and structures located in whole or in part in identified floodways shall be designed and constructed in accordance with ASCE 24.

R322.1.1 Alternative provisions. As an alternative to the requirements in Section R322, ASCE 24 is permitted subject to the limitations of this code and the limitations therein.

R322.1.2 Structural systems. Structural systems of buildings and structures shall be designed, connected and anchored to resist flotation, collapse or permanent lateral movement due to structural loads and stresses from flooding equal to the design flood elevation.

R322.1.3 Flood-resistant construction. Buildings and structures erected in areas prone to flooding shall be constructed by methods and practices that minimize flood damage.

R322.1.4 Establishing the design flood elevation. The design flood elevation shall be used to define flood hazard areas. At a minimum, the design flood elevation shall be the higher of the following:

1. The base flood elevation at the depth of peak elevation of flooding, including wave height, that has a 1-percent (100-year flood) or greater chance of being equaled or exceeded in any given year.
2. The elevation of the design flood associated with the area designated on a flood hazard map adopted by the community, or otherwise legally designated.

R322.1.4.1 Determination of design flood elevations. If design flood elevations are not specified, the *building official* is authorized to require the applicant to comply with either of the following:

1. Obtain and reasonably use data available from a federal, state or other source.
2. Determine the design flood elevation in accordance with accepted hydrologic and hydraulic engineering practices used to define special flood hazard areas. Determinations shall be undertaken by a registered *design professional* who shall document that the technical methods used reflect currently accepted engineering practice. Studies, analyses and computations shall be submitted in sufficient detail to allow thorough review and *approval*.

R322.1.4.2 Determination of impacts. In riverine flood hazard areas where design flood elevations are specified but floodways have not been designated, the applicant shall demonstrate that the effect of the proposed buildings and structures on design flood elevations, including fill, when combined with other existing and anticipated flood hazard area encroachments, will not increase the design flood elevation more than 1 foot (305 mm) at any point within the *jurisdiction*.

R322.1.5 Lowest floor. The lowest floor shall be the lowest floor of the lowest enclosed area, including *basement*, and excluding any unfinished flood-resistant enclosure that is useable solely for vehicle parking, building access or limited storage provided that such enclosure is not built so as to render the building or structure in violation of this section.

R322.1.6 Protection of mechanical, plumbing and electrical systems. Electrical systems, *equipment* and components; heating, ventilating, air-conditioning; plumbing *appliances* and plumbing fixtures; *duct systems*; and other service *equipment* shall be located at or above the elevation required in Section R322.2 or R322.3. If replaced as part of a substantial improvement, electrical systems, *equipment* and components; heating, ventilating, air-conditioning and plumbing *appliances* and plumbing fixtures; *duct systems*; and other service *equipment* shall meet the requirements of this section. Systems, fixtures, and *equipment* and components shall not be mounted on or penetrate through walls intended to break away under flood loads.

Exception: Locating electrical systems, *equipment* and components; heating, ventilating, air-conditioning; plumbing *appliances* and plumbing fixtures; *duct systems*; and other service *equipment* is permitted below the elevation required in Section R322.2 or R322.3 provided that they are designed and installed to prevent water from entering or accumulating within the components and to resist hydrostatic and hydrodynamic loads and stresses, including the effects of buoyancy, during the occurrence of flooding to the design flood elevation in accordance with ASCE 24. Electrical wiring systems are permitted to be located below the required elevation provided that they conform to the provisions of the electrical part of this code for wet locations.

[S] R322.1.7 Protection of water supply and sanitary sewage systems. New and replacement water supply systems shall be designed to minimize or eliminate infiltration of flood waters into the systems in accordance with the plumbing provisions of this code. New and replacement sanitary sewage systems shall be designed to minimize or eliminate infiltration of floodwaters into systems and discharges from systems into floodwaters in accordance with the ((~~plumbing provisions of this code and Chapter 3 of the *International Private Sewage Disposal Code*~~)) *Uniform Plumbing Code*.

DRAFT

R322.1.8 Flood-resistant materials. Building materials and installation methods used for flooring and interior and exterior walls and wall coverings below the elevation required in Section R322.2 or R322.3 shall be flood damage-resistant materials that conform to the provisions of FEMA TB-2.

R322.1.9 Manufactured homes. The bottom of the frame of new and replacement *manufactured homes* on foundations that conform to the requirements of Section R322.2 or R322.3, as applicable, shall be elevated to or above the elevations specified in Section R322.2 (flood hazard areas including A Zones) or R322.3 in coastal high-hazard areas (V Zones and Coastal A Zones). The anchor and tie-down requirements of the applicable state or federal requirements shall apply. The foundation and anchorage of *manufactured homes* to be located in identified floodways shall be designed and constructed in accordance with ASCE 24.

R322.1.10 As-built elevation documentation. A registered *design professional* shall prepare and seal documentation of the elevations specified in Section R322.2 or R322.3.

R322.2 Flood hazard areas (including A Zones). Areas that have been determined to be prone to flooding and that are not subject to high-velocity wave action shall be designated as flood hazard areas. Flood hazard areas that have been delineated as subject to wave heights between 1-1/2 feet (457 mm) and 3 feet (914 mm) or otherwise designated by the jurisdiction shall be designated as Coastal A Zones and are subject to the requirements of Section R322.3. Buildings and structures constructed in whole or in part in flood hazard areas shall be designed and constructed in accordance with Sections R322.2.1 through R322.2.3.

[S] R322.2.1 Elevation requirements.

1. Buildings and structures in flood hazard areas, including flood hazard areas designated as Coastal A Zones, shall have the lowest floors elevated to or above the base flood elevation plus 1 foot (305 mm), or the design flood elevation, whichever is higher, or a greater elevation as designated by the *Seattle Municipal Code*.
2. In areas of shallow flooding (AO Zones), buildings and structures shall have the lowest floor (including *basement*) elevated to a height above the highest adjacent *grade* of not less than the depth number specified in feet (mm) on the FIRM plus 1 foot (305 mm), or not less than 3 feet (915 mm) if a depth number is not specified.
3. Basement floors that are below *grade* on all sides shall be elevated to or above base flood elevation plus 1 foot (305 mm), or the design flood elevation, whichever is higher.

Exception: Enclosed areas below the design flood elevation, including *basements* with floors that are not below *grade* on all sides, shall meet the requirements of Section R322.2.2.

R322.2.2 Enclosed area below design flood elevation. Enclosed areas, including crawl spaces, that are below the design flood elevation shall:

1. Be used solely for parking of vehicles, building access or storage.
2. Be provided with flood openings that meet the following criteria and are installed in accordance with Section R322.2.2.1:
   - 2.1. The total net area of nonengineered openings shall be not less than 1 square inch (645 mm^2) for each square foot (0.093 m^2) of enclosed area where the enclosed area is measured on the exterior of the enclosure walls, or the openings shall be designed as engineered openings and the *construction documents* shall include a statement by a registered *design professional* that the design of the openings will provide for equalization of hydrostatic flood forces on *exterior walls* by allowing for the automatic entry and exit of floodwaters as specified in Section 2.7.2.2 of ASCE 24.
   - 2.2. Openings shall be not less than 3 inches (76 mm) in any direction in the plane of the wall.
   - 2.3. The presence of louvers, blades, screens and faceplates or other covers and devices shall allow the automatic flow of floodwater into and out of the enclosed areas and shall be accounted for in the determination of the net open area.

R322.2.2.1 Installation of openings. The walls of enclosed areas shall have openings installed such that:

1. There shall be not less than two openings on different sides of each enclosed area; if a building has more than one enclosed area below the design flood elevation, each area shall have openings.
2. The bottom of each opening shall be not more than 1 foot (305 mm) above the higher of the final interior grade or floor and the finished exterior grade immediately under each opening.
3. Openings shall be permitted to be installed in doors and windows; doors and windows without installed openings do not meet the requirements of this section.

R322.2.3 Foundation design and construction. Foundation walls for buildings and structures erected in flood hazard areas shall meet the requirements of Chapter 4.

Exception: Unless designed in accordance with Section R404:

1. The unsupported height of 6-inch (152 mm) plain masonry walls shall be not more than 3 feet (914 mm).

DRAFT

2. The unsupported height of 8-inch (203 mm) plain masonry walls shall be not more than 4 feet (1219 mm).
3. The unsupported height of 8-inch (203 mm) reinforced masonry walls shall be not more than 8 feet (2438 mm).

For the purpose of this exception, unsupported height is the distance from the finished *grade* of the under-floor space to the top of the wall.

R322.2.4 Tanks. Underground tanks shall be anchored to prevent flotation, collapse and lateral movement under conditions of the base flood. Above-ground tanks shall be installed at or above the elevation required in Section R322.2.1 or shall be anchored to prevent flotation, collapse and lateral movement under conditions of the base flood.

R322.3 Coastal high-hazard areas (including V Zones and Coastal A Zones, where designated). Areas that have been determined to be subject to wave heights in excess of 3 feet (914 mm) or subject to high-velocity wave action or wave-induced erosion shall be designated as coastal high-hazard areas. Flood hazard areas that have been designated as subject to wave heights between 1-1/2 feet (457 mm) and 3 feet (914 mm) or otherwise designated by the jurisdiction shall be designated as Coastal A Zones. Buildings and structures constructed in whole or in part in coastal high-hazard areas and Coastal A Zones, where designated, shall be designed and constructed in accordance with Sections R322.3.1 through R322.3.10.

[S] R322.3.1 Location and site preparation.

1. New buildings and buildings that are determined to be substantially improved pursuant to Section ((~~R105.3.1.1~~)) R105.7.3 shall be located landward of the reach of mean high tide.
2. For any alteration of sand dunes and mangrove stands, the *building official* shall require submission of an engineering analysis that demonstrates that the proposed *alteration* will not increase the potential for flood damage.

R322.3.2 Elevation requirements.

1. Buildings and structures erected within coastal high-hazard areas and Coastal A Zones, shall be elevated so that the bottom of the lowest horizontal structural members supporting the lowest floor, with the exception of piling, pile caps, columns, grade beams and bracing, is elevated to or above the base flood elevation plus 1 foot (305 mm) or the design flood elevation, whichever is higher.
2. Basement floors that are below *grade* on all sides are prohibited.
3. The use of fill for structural support is prohibited.
4. Minor grading, and the placement of minor quantities of fill, shall be permitted for landscaping and for drainage purposes under and around buildings and for support of parking slabs, pool decks, patios and walkways.
5. Walls and partitions enclosing areas below the design flood elevation shall meet the requirements of Sections R322.3.5 and R322.3.6.

R322.3.3 Foundations. Buildings and structures erected in coastal high-hazard areas and Coastal A Zones shall be supported on pilings or columns and shall be adequately anchored to such pilings or columns. The space below the elevated building shall be either free of obstruction or, if enclosed with walls, the walls shall meet the requirements of Section R322.3.5. Pilings shall have adequate soil penetrations to resist the combined wave and wind loads (lateral and uplift). Water-loading values used shall be those associated with the design flood. Wind-loading values shall be those required by this code. Pile embedment shall include consideration of decreased resistance capacity caused by scour of soil strata surrounding the piling. Pile systems design and installation shall be certified in accordance with Section R322.3.9. Spread footing, mat, raft or other foundations that support columns shall not be permitted where soil investigations that are required in accordance with Section R401.4 indicate that soil material under the spread footing, mat, raft or other foundation is subject to scour or erosion from wave-velocity flow conditions. If permitted, spread footing, mat, raft or other foundations that support columns shall be designed in accordance with ASCE 24.

Exception: In Coastal A Zones, stem wall foundations supporting a floor system above and backfilled with soil or gravel to the underside of the floor system shall be permitted provided that the foundations are designed to account for wave action, debris impact, erosion and local scour. Where soils are susceptible to erosion and local scour, stem wall foundations shall have deep footings to account for the loss of soil.

R322.3.4 Concrete slabs. Concrete slabs used for parking, floors of enclosures, landings, decks, walkways, patios and similar uses that are located beneath structures, or slabs that are located such that if undermined or displaced during base flood conditions could cause structural damage to the building foundation, shall be designed and constructed in accordance with one of the following:

1. To be structurally independent of the foundation system of the structure, to not transfer flood loads to the main structure, and to be frangible and break away under flood conditions prior to base flood conditions. Slabs shall be a maximum of 4 inches (102 mm) thick, shall not have turned-down edges, shall not contain reinforcing, shall have isolation joints at pilings and columns, and shall have control or construction joints in both directions spaced not more than 4 feet (1219 mm) apart.

DRAFT

SECTION R323
STORM SHELTERS

R323.1 General. This section applies to storm shelters where constructed as separate detached buildings or where constructed as safe rooms within buildings for the purpose of providing refuge from storms that produce high winds, such as tornados and hurricanes. In addition to other applicable requirements in this code, storm shelters shall be constructed in accordance with ICC/NSSA-500.

SECTION R324
SOLAR ENERGY SYSTEMS

R324.1 General. Solar energy systems shall comply with the provisions of this section.

R324.2 Solar thermal systems. Solar thermal systems shall be designed and installed in accordance with Chapter 23 and the *International Fire Code.*

[W] R324.3 Photovoltaic systems. Installation, modification, or *alteration* of solar photovoltaic power systems shall comply with this section and the *International Fire Code.* Section R104.11 alternate materials and methods of this code shall be considered when approving the installation of solar photovoltaic power systems. Photovoltaic systems shall be designed and installed in accordance with Sections R324.3.1 through R324.7.1, ((~~NFPA 70~~)) the *Seattle Electrical Code*, and the manufacturer's installation instructions. Inverters shall be *listed* and *labeled* in accordance with UL 1741. Systems connected to the utility grid shall use inverters *listed* for utility interaction.

Exception: Detached, nonhabitable Group U structures shall not be subject to the requirements of this section for structural and life safety.

R324.3.1 Equipment listings. Photovoltaic panels and modules shall be listed and labeled in accordance with UL 1703. Inverters shall be *listed* and *labeled* in accordance with UL 1741. Systems connected to the utility grid shall use inverters *listed* for utility interaction.

[W] R324.4 Rooftop-mounted photovoltaic systems. Rooftop-mounted *photovoltaic panel systems* installed on or above the roof covering shall be designed and installed in accordance with this section.

Exceptions: The roof structure shall be deemed adequate to support the load of the rooftop solar photovoltaic system if all of the following requirements are met:

1. The solar photovoltaic panel system shall be designed for the wind speed of the local area, and shall be installed per the manufacturer's specifications.
2. The ground snow load does not exceed 70 pounds per square foot.
3. The total dead load of modules, supports, mountings, raceways, and all other appurtenances weigh no more than 4 pounds per square foot.
4. Photovoltaic modules are not mounted higher than 18 inches above the surface of the roofing to which they are affixed.
5. Supports for solar modules are to be installed to spread the dead load across as many roof-framing members as needed, so that no point load exceeds 50 pounds.

R324.4.1 Structural requirements. Rooftop-mounted *photovoltaic panel systems* shall be designed to structurally support the system and withstand applicable gravity loads in accordance with Chapter 3. The roof on which these systems are installed shall be designed and constructed to support the loads imposed by such systems in accordance with Chapter 8.

R324.4.1.1 Roof load. Portions of roof structures not covered with *photovoltaic panel systems* shall be designed for dead loads and roof loads in accordance with Sections R301.4 and R301.6. Portions of roof structures covered with *photovoltaic panel systems* shall be designed for the following load cases:

1. Dead load (including *photovoltaic panel* weight) plus snow load in accordance with Table R301.2(1).
2. Dead load (excluding *photovoltaic panel* weight) plus roof live load or snow load, whichever is greater, in accordance with Section R301.6.

R324.4.1.2 Wind load. Rooftop-mounted *photovoltaic panel* or *module* systems and their supports shall be designed and installed to resist the component and cladding loads specified in Table R301.2(2), adjusted for height and exposure in accordance with Table R301.2(3).

R324.4.2 Fire classification. Rooftop-mounted *photovoltaic panel systems* shall have the same fire classification as the roof assembly required in Section R902.

R324.4.3 Roof penetrations. Roof penetrations shall be flashed and sealed in accordance with Chapter 9.

R324.5 Building-integrated photovoltaic systems. Building-integrated photovoltaic systems that serve as roof coverings shall be designed and installed in accordance with Section R905.

DRAFT

R324.5.1 Photovoltaic shingles. Photovoltaic shingles shall comply with Section R905.16.

R324.5.2 Fire classification. *Building-integrated photovoltaic systems* shall have a fire classification in accordance with Section R902.3.

R324.6 Roof access and pathways. Roof access, pathways and setback requirements shall be provided in accordance with Sections R324.6.1 through R324.6.2.1. Access and minimum spacing shall be required to provide emergency access to the roof, to provide pathways to specific areas of the roof, provide for smoke ventilation opportunity areas, and to provide emergency egress from the roof.

Exceptions:

1. Detached, nonhabitable structures, including but not limited to detached garages, parking shade structures, carports, solar trellises and similar structures, shall not be required to provide roof access.
2. Roof access, pathways and setbacks need not be provided where the code official has determined that rooftop operations will not be employed.
3. These requirements shall not apply to roofs with slopes of two units vertical in 12 units horizontal (17-percent slope) or less.

R324.6.1 Pathways. Not fewer than two pathways, on separate roof planes from lowest roof edge to ridge and not less than 36 inches (914 mm) wide, shall be provided on all buildings. Not fewer than one pathway shall be provided on the street or driveway side of the roof. For each roof plane with a photovoltaic array, a pathway not less than 36 inches wide (914 mm) shall be provided from the lowest roof edge to ridge on the same roof plane as the photovoltaic array, on an adjacent roof plane, or straddling the same and adjacent roof planes. Pathways shall be over areas capable of supporting fire fighters accessing the roof. Pathways shall be located in areas with minimal obstructions such as vent pipes, conduit, or mechanical equipment.

R324.6.2 Setback at ridge. For photovoltaic arrays occupying not more than 33 percent of the plan view total roof area, not less than an 18-inch (457 mm) clear setback is required on both sides of a horizontal ridge. For photovoltaic arrays occupying more than 33 percent of the plan view total roof area, not less than a 36-inch (914 mm) clear setback is required on both sides of a horizontal ridge.

R324.6.2.1 Alternative setback at ridge. Where an automatic sprinkler system is installed within the dwelling in accordance with NFPA 13D or Section P2904, setbacks at ridges shall comply with one of the following:

1. For photovoltaic arrays occupying not more than 66 percent of the plan view total roof area, not less than an 18-inch (457 mm) clear setback is required on both sides of a horizontal ridge.
2. For photovoltaic arrays occupying more than 66 percent of the plan view total roof area, not less than a 36-inch (914 mm) clear setback is required on both sides of a horizontal ridge.

R324.6.2.2 Emergency escape and rescue opening. Panels and modules installed on dwellings shall not be placed on the portion of a roof that is below an emergency escape and rescue opening. A pathway not less than 36 inches (914 mm) wide shall be provided to the emergency escape and rescue opening.

[W] ((~~R324.7 Ground-mounted photovoltaic systems.~~ ~~Ground-mounted photovoltaic systems shall be designed and installed in accordance with Section R301.~~

~~**R324.7.1 Fire separation distances.** Ground-mounted photovoltaic systems shall be subject to the *fire separation distance* requirements determined by the local *jurisdiction*.~~))

SECTION R325
MEZZANINES

[W] R325.1 General. Mezzanines shall comply with Sections R325 through R325.5. *Habitable attics* shall comply with Section ((~~R325.6~~)) R326.

R325.2 Mezzanines. The clear height above and below mezzanine floor construction shall be not less than 7 feet (2134 mm).

R325.3 Area limitation. The aggregate area of a mezzanine or mezzanines shall be not greater than one-third of the floor area of the room or space in which they are located. The enclosed portion of a room shall not be included in a determination of the floor area of the room in which the *mezzanine* is located.

Exception: The aggregate area of a mezzanine located within a dwelling unit equipped with a fire sprinkler system in accordance with Section P2904 shall not be greater than one-half of the floor area of the room, provided that the mezzanine meets all of the following requirements:

1. Except for enclosed closets and bathrooms, the mezzanine is open to the room in which such mezzanine is located.

DRAFT

2. The opening to the room is unobstructed except for walls not more than 42 inches (1067 mm) in height, columns and posts.
3. The exceptions to Section R325.5 are not applied.

Interpretation R325.3: Only the following unenclosed areas of the room or space containing the *mezzanine* shall be used for purposes of calculating the allowable *mezzanine* floor area:

1. Areas with a ceiling height of at least 7 feet located directly below the *mezzanine*, except that no additional area benefit shall be gained for stacked *mezzanines*; and
2. Areas where the ceiling has a slope of less than 2:12 and with a ceiling height of at least 14 feet plus the thickness of the *mezzanine* floor construction; and
3. Areas where the ceiling has a slope of 2:12 or more and has a ceiling height of at least 12 feet plus the thickness of the *mezzanine* floor construction, provided that the *mezzanine* complies with Section 1208.2, exception 2.

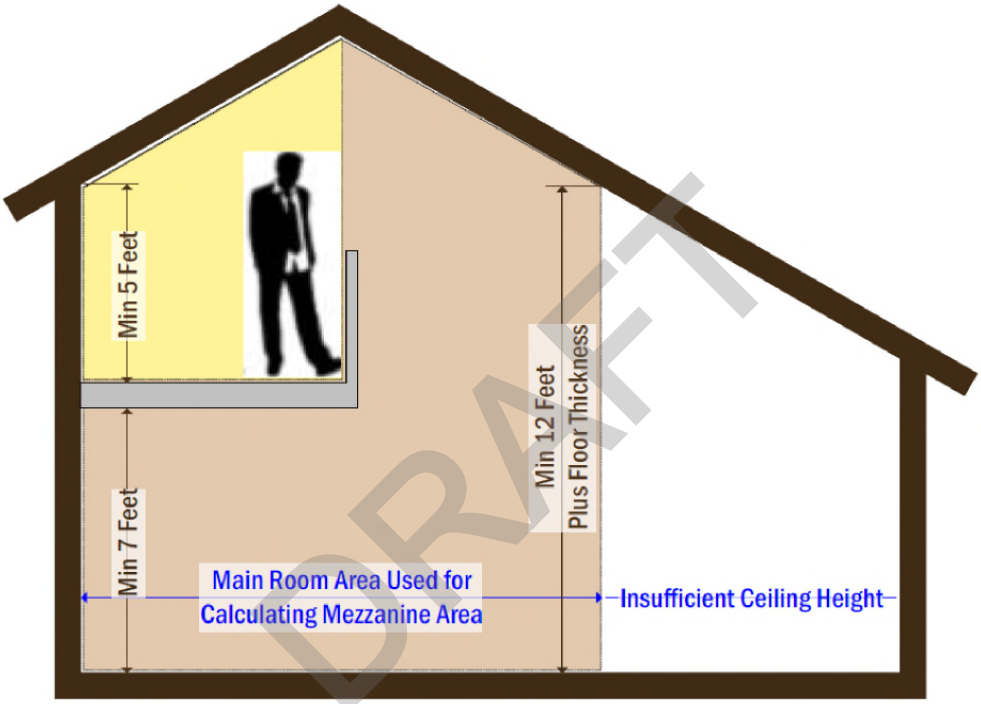

DRAFT

Basis for Calculating Allowable Mezzanine Area When Using Sloped Ceiling Provisions

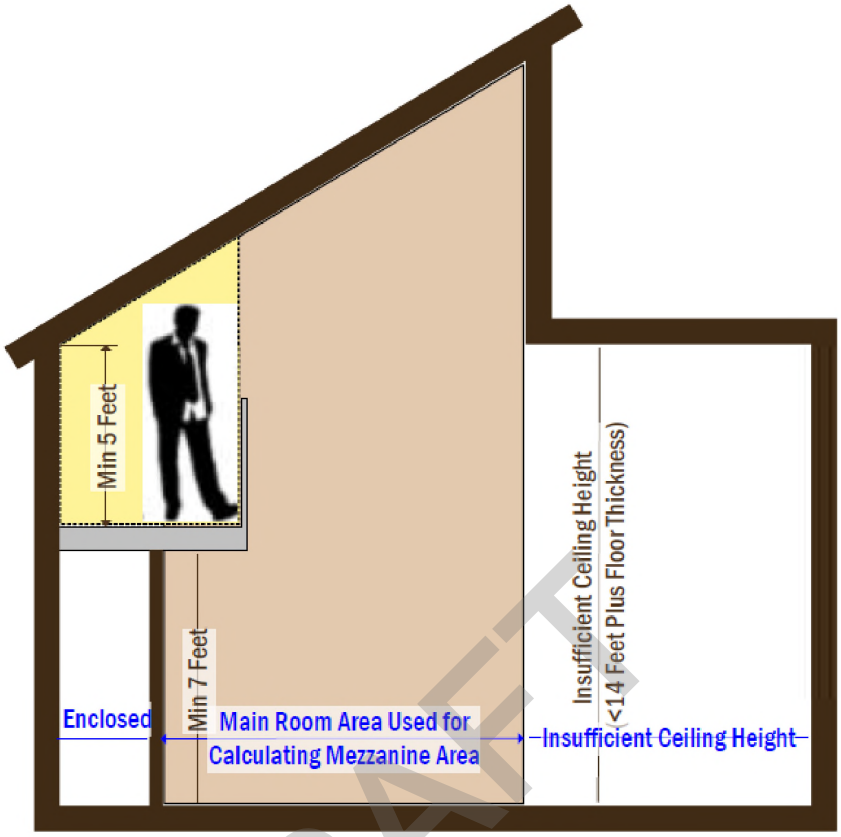

Basis for Calculating Allowable Mezzanine Area With Other Conditions

R325.4 Means of egress. The means of egress for mezzanines shall comply with the applicable provisions of Section R311.

[W] R325.5 Openness. Mezzanines shall be open and unobstructed to the room in which they are located except for walls not more than 36 inches (914 mm) in height, columns and posts.

Exceptions:

1. Mezzanines or portions thereof are not required to be open to the room in which they are located, provided that the aggregate floor area of the enclosed space is not greater than 10 percent of the mezzanine area.
2. ((~~In buildings~~)) Mezzanines that are not more than two stories above *grade plane* and equipped throughout with an automatic sprinkler system in accordance with Section R313, a mezzanine shall not be required to be open to the room in which the mezzanine is located.

DRAFT

[W] SECTION R326
HABITABLE ATTIC

R326.1 General. Habitable attics shall comply with Sections R326 through R326.4.

R326.2 Minimum Dimensions. A *habitable attic* shall have a minimum floor area in accordance with R304 and a ceiling height in accordance with R305.

R326.3 Story Above Grade Plane. A *habitable attic* shall be considered a story above grade plane.

Exception: A *habitable attic* shall not be considered a story above grade plane provided that the *habitable attic* meets all the following requirements:

1. The aggregate area of the *habitable attic* is not greater than one-half of the floor area of the story below.
2. The habitable attic is located within a dwelling unit equipped with a fire sprinkler system in accordance with Section P2904 or NFPA 13D.
3. The occupiable space is enclosed by the roof assembly above, knee walls (if applicable) on the sides and the floor-ceiling assembly below.
4. The floor of the *habitable attic* shall not extend beyond the exterior walls of the story below.

[W] SECTION R327
SLEEPING LOFTS

R327.1 General. Sleeping lofts shall comply with Sections R327 through R327.5.

R327.2 Sleeping loft area and dimensions. Sleeping lofts shall meet the minimum area and dimension requirements of Sections R327.2.1 through R327.2.3.

R327.2.1 Area. Sleeping lofts shall have a floor area of not less than 35 square feet (3.25 m^2) and less than 70 square feet (6.5 m^2).

R327.2.2 Minimum horizontal dimensions. Sleeping lofts shall be not less than 5 feet (1524 mm) in any horizontal dimension.

R327.2.3 Height effect on sleeping loft area. Portions of a sleeping loft with a sloped ceiling measuring less than 3 feet (914 mm) from the finished floor to the finished ceiling shall not be considered as contributing to the minimum required area for the loft but shall contribute to the maximum allowable area.

Exception: Under gable roofs with a minimum slope of 6 units vertical in 12 units horizontal (50-percent slope), portions of a sleeping loft with a sloped ceiling measuring less than 16 inches (406 mm) from the finished floor to the finished ceiling shall not be considered as contributing to the minimum required area for the sleeping loft but shall contribute to the maximum allowable area.

R327.3 Sleeping loft access and egress. The access to and primary egress from sleeping lofts shall be of any type described in Sections R327.3.1 through R327.3.5 and shall meet the sleeping loft where the sleeping loft's ceiling height is not less than 3 feet (914 mm) along the entire width of the access and egress component.

R327.3.1 Stairways. Stairways accessing sleeping lofts shall comply with Sections R327.3.1.1 through R327.3.1.7.

R327.3.1.1 Headroom. The headroom above the sleeping loft access and egress shall be not less than 6 feet 2 inches (1880 mm), as measured vertically, from a sloped line connecting the tread, landing, or landing platform nosing's in the center of their width, and vertically from the landing or landing platform along the center of its width.

R327.3.1.2 Width. Stairways accessing a sleeping loft shall not be less than 17 inches (432 mm) in clear width at or above the handrail. The width below the handrail shall be not less than 20 inches (508 mm).

R327.3.1.3 Treads and risers. Risers for stairs accessing a sleeping loft shall be not less than 7 inches (178 mm) and not more than 12 inches (305 mm) in height. Tread depth and riser height shall be calculated in accordance with one of the following formulas:

1. Under gable roofs with a minimum slope of 6 units vertical in 12 units horizontal (50-percent slope), portions of a sleeping loft with a sloped ceiling measuring less than 16 inches (406 mm) from the finished floor to the finished ceiling shall not be considered as contributing to the minimum required area for the sleeping loft but shall contribute to the maximum allowable area.
2. The tread depth shall be 20 inches (508 mm) minus four-thirds of the riser height.

R327.3.1.4 Landings. Intermediate landings and landings at the bottom of stairways shall comply with Section R311.7.6, except that the depth in the direction of travel shall be not less than 24 inches (508 mm).

R327.3.1.5 Landing platforms. The top tread and riser of stairways accessing sleeping lofts shall be constructed as a landing platform where the loft ceiling height is less than 6 feet 2 inches (1880 mm) where the stairway meets the sleeping loft. The landing platform shall be not less than 18 inches (508 mm) in width and in depth measured horizontally from and perpendicular to the nosing of the landing platform. The landing platform riser height to the edge of the sleeping loft floor, shall not be greater than 18 inches (406 to 457 mm) in height.

R327.3.1.6 Handrails. Handrails shall comply with Section R311.7.8.

R327.3.1.7 Stairway guards. Guards at open sides of stairways, landings, and landing platforms shall comply with Section R312.1. R327.3.2 Ladders. Ladders accessing sleeping lofts shall comply with Sections R327.3.2.1 and R327.3.2.2.

R327.3.2 Ladders. Ladders accessing sleeping lofts shall comply with Sections R327.3.2.1 and R327.3.2.2.

R327.3.2.1 Size and capacity. Ladders accessing sleeping lofts shall have a rung width of not less than 12 inches (305 mm), and 10-inch (254 mm) to 14-inch (356 mm) spacing between rungs. Ladders shall be capable of supporting a 300 pound (136 kg) load on any rung. Rung spacing shall be uniform within 3/8 inch (9.5 mm).

R327.3.2.2 Incline. Ladders shall be installed at 70 to 80 degrees from horizontal.

R327.3.3 Alternating tread devices. Alternating tread devices accessing sleeping lofts shall comply with Sections R311.7.11.1 and R311.7.11.2. The clear width at and below the handrails shall be not less than 20 inches (508 mm).

R327.3.4 Ships ladders. Ships ladders accessing sleeping lofts shall comply with Sections R311.7.12.1 and R311.7.12.2. The clear width at and below handrails shall be not less than 20 inches (508 mm).

R327.4 Sleeping loft guards. Sleeping loft guards shall be located along the open side(s) of sleeping lofts. Sleeping loft guards shall be not less than 36 inches (914 mm) in height or one-half of the clear height to the ceiling, whichever is less. Sleeping loft guards shall comply with Section R312.1.3 and Table R301.5 for their components.

R327.5 Emergency escape and rescue openings. An egress roof access window shall be installed in each sleeping loft and shall be deemed to meet the requirements of Section R310 where installed such that the bottom of the opening is not more than 44 inches (1118 mm) above the sleeping loft floor, provided the egress roof access window complies with the minimum opening area requirements of Section R310.2.1.

DRAFT

[W] SECTION ((~~R326~~)) R328
SWIMMING POOLS, SPAS AND HOT TUBS

((~~R326.1~~)) R328.1 General. The design and construction of pools and spas shall comply with the 2018 *International Swimming Pool and Spa Code* ((~~.~~)) if the facility is one of the following:

1. For the sole use of residents and invited guests at a single-family dwelling;
2. For the sole use of residents and invited guests of a duplex owned by the residents; or
3. Operated exclusively for physical therapy or rehabilitation and under the supervision of a licensed medical practitioner.

[W] SECTION ((~~R327~~)) R329
((~~STATIONARY~~)) ENERGY STORAGE ((~~BATTERY~~)) SYSTEMS

((~~R327.1~~)) R329.1 General. ((~~*Stationary storage battery system*~~)) *Energy Storage Systems (ESS)* shall comply with the provisions of this section.

((~~R327.2~~)) R329.2 Equipment listings. ((~~*Stationary storage battery systems*~~)) *ESS* shall be *listed* and *labeled* for residential use in accordance with UL 9540.

Exceptions:

1. Where *approved*, repurposed unlisted battery systems from electric vehicles are allowed to be installed outdoors or in detached sheds located not less than 5 feet (1524 mm) from exterior walls, property lines and public ways.
2. *Battery systems* that are an integral part of an electric vehicle are allowed provided that the installation complies with Section 625.48 of NFPA 70.
3. Battery systems less than 1 kWh (3.6 megajoules).

((~~R327.3~~)) R329.3 Installation. ((~~*Stationary storage battery systems*~~)) *ESS* shall be installed in accordance with the manufacturer's instructions and their *listing*, if applicable, and shall not be installed within the habitable space of a dwelling unit.

((~~R327.4~~)) R329.4 Electrical installation. ((~~*Stationary storage battery systems*~~)) *ESS* shall be installed in accordance with NFPA 70. Inverters shall be *listed* and *labeled* in accordance with UL 1741 or provided as part of the UL 9540 listing. Systems connected to the utility grid shall use inverters listed for utility interaction.

((~~R327.5~~)) R329.5 Ventilation. Indoor installations of ((~~*stationary storage battery systems*~~)) *ESS* that include batteries that produce hydrogen or other flammable gases during charging shall be provided with ventilation in accordance with Section M1307.4.

((~~R327.6~~)) R329.6 Protection from impact. ((~~*Stationary storage battery systems*~~)) *ESS* installed in a location subject to vehicle damage shall be protected by approved barriers.

R329.7 Commissioning. ESS shall be commissioned as follows:

1. Verify that the system is installed in accordance with the approved plans and manufacturer's instructions and is operating properly.
2. Provide a copy of the manufacturer's installation, operation, maintenance, and decommissioning instructions provided with the listed system.
3. Provide a label on the installed system containing the contact information for the qualified maintenance and service providers.

R329.7.1 Installation prior to closing. Where the system is installed in a one- or two-family dwelling or townhouse that is owned by the builder and has yet to be sold, commissioning shall be conducted as outlined in Section R329.7, and the builder shall then transfer the required information in Section R329.7 to the homeowner when the property is transferred to the owner at the closing.

[W] SECTION R330
ADULT FAMILY HOMES

R330.1 General. This section shall apply to all newly constructed *adult family homes* and all existing single family homes being converted to *adult family homes*. This section shall not apply to those *adult family homes* licensed by the state of Washington Department of Social and Health Services prior to July 1, 2001.

R330.2 Sleeping room classification. Each sleeping room in an *adult family home* shall be classified as:

1. Type S - Where the means of egress contains stairs, elevators or platform lifts.
2. Type NS1 - Where one means of egress is at grade level or a ramp constructed in accordance with Section R330.8 is provided.
3. Type NS2 - Where two means of egress are at grade level or ramps constructed in accordance with Section R330.8 are provided.

R330.3 Types of locking devices and door activation. All bedroom and bathroom doors shall be openable from the outside when locked.

Every closet shall be readily openable from the inside.

Operable parts of door handles, pulls, latches, locks and other devices installed in *adult family homes* shall be operable with one hand and shall not require tight grasping, pinching or twisting of the wrist.

Pocket doors shall have graspable hardware available when in the closed or open position.

The force required to activate operable parts shall be 5.0 pounds (22.2 N) maximum. Required exit doors shall have no additional locking devices.

Required exit door hardware shall unlock inside and outside mechanisms when exiting the building allowing reentry into the *adult family home* without the use of a key, tool or special knowledge.

R330.4 Smoke and carbon monoxide alarm requirements. All *adult family homes* shall be equipped with smoke and carbon monoxide alarms installed as required in Sections R314 and R315. Alarms shall be installed in such a manner so that the detection device warning is audible from all areas of the *dwelling* upon activation of a single alarm.

R330.5 Escape windows and doors. Every sleeping room shall be provided with emergency escape and rescue windows as required by Section R310. No alternatives to the sill height such as steps, raised platforms or other devices placed by the openings will be *approved* as meeting this requirement.

R330.6 Fire apparatus access roads and water supply for fire protection. *Adult family homes* shall be served by fire apparatus access roads and water supplies meeting the requirements of the *International Fire Code*.

R330.7 Grab bar general requirements. Where facilities are designated for use by *adult family home* clients, grab bars for water closets, bathtubs and shower stalls shall be installed according to this section.

R330.7.1 Grab bar cross section. Grab bars with a circular cross section shall have an outside diameter of 1-1/4 inches minimum and 2 inches maximum. Grab bars with noncircular cross section shall have a cross section dimension of 2 inches maximum and a perimeter dimension of 4 inches minimum and 4-5/8 inches maximum.

DRAFT

R330.7.2 Grab bar installation. Grab bars shall have a spacing of 1-1/2 inches between the wall and the bar. Projecting objects, control valves and bathtub or shower stall enclosure features above, below and at the ends of the grab bar shall have a clear space of 1-1/2 inches to the grab bar.

Exception: Swing-up grab bars shall not be required to meet the 1-1/2 inch spacing requirement. Grab bars shall have a structural strength of 250 pounds applied at any point on the grab bar, fastener, mounting device or supporting structural member. Grab bars shall not be supported directly by any residential grade fiberglass bathing or showering unit. Acrylic bars found in bathing units shall be removed. Fixed position grab bars, when mounted, shall not rotate, spin or move, and shall have a graspable surface finish.

R330.7.3 Grab bars at water closets. Water closets shall have grab bars mounted on both sides. Grab bars can be a combination of fixed position and swing-up bars. Grab bars shall meet the requirements of Section R330.7. Grab bars shall mount between 33 inches and 36 inches above floor grade. Centerline distance between grab bars, regardless of type used, shall be between 25 inches minimum and 30 inches maximum.

R330.7.3.1 Fixed position grab bars. Fixed position grab bars shall be at least 36 inches in length and start 12 inches from the rear wall.

R330.7.3.2 Swing-up grab bars. Swing-up grab bars shall be a minimum of 28 inches in length from the rear wall.

R330.7.4 Grab bars at bathtubs. Horizontal and vertical grab bars shall meet the requirements of Section R330.8.

R330.7.4.1 Vertical grab bars. Vertical grab bars shall be a minimum of 18 inches long and installed at the control end wall and head end wall. Grab bars shall be mounted within 4 inches of the exterior of the bathtub edge or within 4 inches within the bathtub. The bottom end of the bar shall start between 36 inches and 42 inches above floor grade.

Exception: The required vertical grab bar can be substituted with a floor to ceiling grab bar meeting the requirements of Section R330.7 at the control end and head end entry points.

R330.7.4.2 Horizontal grab bars. Horizontal grab bars shall be provided at the control end, head end, and the back wall within the bathtub area. Grab bars shall be mounted between 33 inches and 36 inches above floor grade. Control end and head end grab bars shall be at least 24 inches in length. Back wall grab bars shall be at least 36 inches in length.

R330.7.5 Grab bars at shower stalls. Where shower stalls are provided to meet the requirements for bathing facilities, grab bars shall meet the requirements of Section R330.7.

Exception: Shower stalls with permanent built-in seats are not required to have vertical or horizontal grab bars at the seat end wall. A vertical floor to ceiling grab bar shall be installed within 4 inches of the exterior of the shower aligned with the nose of the built-in seat.

R330.7.5.1 Vertical grab bars. Vertical grab bars shall be at least 18 inches in length and installed at the control end wall and head end wall. Vertical bars shall mount within 4 inches of the exterior of the shower stall or within 4 inches inside the shower stall. The bottom end of vertical bars shall be mounted between 36 inches and 42 inches above floor grade.

R330.7.5.2 Horizontal grab bars. Horizontal grab bars shall be installed on all sides of the shower stall mounted between 33 inches and 36 inches above the floor grade. Horizontal grab bars shall be a maximum of 6 inches from adjacent walls. Horizontal grab bars shall not interfere with shower control valves.

R330.8 Ramps. All interior and exterior *ramps*, when provided, shall be constructed in accordance with Section R311.8 with a maximum slope of 1 vertical to 12 horizontal. The exception to Section R311.8.1 is not allowed for *adult family homes*. Handrails shall be installed in accordance with Section R330.8.1.

R330.8.1 Handrails for ramps. Handrails shall be installed on both sides of ramps between the slope of 1 vertical to 12 horizontal and 1 vertical and 20 horizontal in accordance with Sections R311.8.1 through R311.8.3.3.

R330.9 Stair treads and risers. Stair treads and risers shall be constructed in accordance with Section R311.7.5. Handrails shall be installed in accordance with Section R330.9.1.

R330.9.1 Handrails for treads and risers. Handrails shall be installed on both sides of treads and risers numbering from one riser to multiple risers. Handrails shall be installed in accordance with Sections R311.7.8 through R311.7.8.4.

R330.10 Shower stalls. Where provided to meet the requirements for bathing facilities, the minimum size of shower stalls for *adult family homes* shall be 30 inches deep by 48 inches long.

[W] SECTION R331
FAMILY HOME CHILD CARE

R331.1 Family home child care means of egress. For *family home child care* with more than six children, each floor level used for family child care purposes shall be served by two remote means of egress. Exterior exit doors shall be operable from the inside without the use of keys or any special knowledge or effort.

DRAFT

R331.1.1 Basement egress. *Basements* located more than 4 feet (1219 mm) below grade level shall not be used for *family home child care* unless one of the following conditions exist:

1. Stairways from the *basement* open directly to the exterior of the building without entering the first floor; or
2. One of the two required means of egress discharges directly to the exterior from the *basement* level, and a self-closing door is installed at the top or bottom of the interior stair leading to the floor above; or
3. One of the two required means of egress is an operable window or door, *approved* for emergency escape or rescue, that opens directly to a public street, public alley, *yard* or exit court; or
4. A residential sprinkler system is provided throughout the entire building in accordance with NFPA 13D.

R331.1.2 Floors above grade. Floors located more than 4 feet above grade level shall not be occupied by children in *family home child care.*

Exceptions:

1. Use of toilet facilities while under supervision of an adult staff person.
2. *Family home child care* may be allowed on the second story if one of the following conditions exists:
   - 2.1. Stairways from the second story open directly to the exterior of the building without entering the first floor; or
   - 2.2. One of the two required means of egress discharges directly to the exterior from the second story level, and a self-closing door is installed at the top or bottom of the interior stair leading to the floor below; or
   - 2.3. A residential sprinkler system is provided throughout the entire building in accordance with NFPA 13D.

R331.2 Emergency escape and rescue. Every sleeping or napping room in a *family home child care* shall have at least one operable window for emergency rescue.

Exception: Sleeping or napping rooms having doors leading to two separate means of egress, or a door leading directly to the exterior of the building.

R331.3 Special hazards. Rooms or spaces containing a commercial-type cooking kitchen, boiler, maintenance shop, janitor closet, laundry, woodworking shop, flammable or combustible storage, or painting operation shall be separated from the *family home child care* area by at least one-hour fire-resistance-rated construction.

Exception: A fire-resistance-rated separation is not required where the food preparation kitchen contains only a domestic cooking range, and the preparation of food does not result in the production of smoke or grease-laden vapors.

DRAFT

SECTION R332
FLOATING HOMES

R332.1 Moorage location. Every *floating home moorage* shall be located on privately-owned or privately-controlled premises in accordance with the Land Use Code, Title 23 of the *Seattle Municipal Code.*

R332.2 Land access. Every *floating home moorage* shall have not less than 20 feet (6096 mm) of land frontage abutting a public street sufficiently improved for automobile travel.

R332.3 Moorage walkways. Every *floating home moorage* shall have firm and substantial walkways with a net width of not less than 4 feet (1219 mm) and extending from land to every *floating home site* in the moorage.

R332.4 Moorage lighting. Every *floating home moorage* and the walkways to every *floating home site* shall be illuminated to provide safe access. All luminaires shall be *listed* for the use.

R332.5 Fire protection. *Floating home moorages* shall be provided with fire extinguishing *equipment* as follows:

1. Portable fire-protection *equipment.* One fire extinguisher, 2A, 20-B:C rating minimum, shall be provided in each required hose station. The fire chief shall designate the type and number of all other fire *appliances* to be installed and maintained in each *floating home moorage.*
2. Standpipes. All portions of floats exceeding 250 feet (76 500 mm) in distance from fire apparatus access and marine service stations shall be provided with an *approved* Class I standpipe system installed according to International Building Code Section 905 and the *International Fire Code*.

R332.6 Water service connections. Every *floating home moorage* shall have a water service connection and shall provide water service *piping* securely fastened and stabilized above water from the water service connection to an outlet connection at each *floating home site* on a *floating home moorage*. The water *piping* in every *floating home* in a *floating home moorage* shall be connected to the water service outlet serving the *floating home* and the connection shall be securely fastened and stabilized above high water line. Water service connections and water service *piping* shall be constructed, installed and maintained in accordance with applicable standards established by or pursuant to ordinance.

R332.7 Public sewer connection. Every *floating home moorage* any part of which is within 300 feet (91 440 mm) of a public sewer and every *floating home moorage* on Shilshole Bay, Salmon Bay, Lake Washington Ship Canal, Lake Union, Portage Bay, Union Bay and that portion of Lake Washington lying within the city limits of Seattle shall have a lawfully-installed connection to a public sewer.

R332.8 Local side sewer system. Every *floating home moorage* within the limits specified in Section R332.7 shall provide a local side sewer system for the collection of *sewage* from every *floating home* in the moorage. The local side sewer system shall be connected to the public sewer, shall have an inlet connection at each *floating home site* and shall be constructed, installed and maintained in accordance with this and all other applicable ordinances regulating the construction, *alteration*, repair and connection of side sewers.

R332.9 Connection to local side sewer system. Every *floating home* in a *floating home moorage* that is required under Section R332.7 to be connected to a public sewer shall be connected to the local side sewer system. Owners and operators of *floating home moorages* shall not permit any *floating home* to be moored at any moorage under their control unless the *floating home* is connected to the local side sewer system. It is a violation for any person to use, occupy or let any *floating home* for human habitation within the limits specified in Section R332.7 unless it is connected to the sewer system.

A reconnection permit is required for any *floating home* that is relocated from its original site of connection to a local side sewer system. Such reconnection is subject to the approval of the Director of Seattle Public Utilities.

R332.10 Sewer installation fees. The fee for the installation of any side sewer serving a *floating home moorage* is the fee provided by law for the connection to the public sewer of side sewers serving mobile home parks.

R332.11 Plumbing systems. All plumbing and plumbing systems in every *floating home* shall meet the requirements of the *Uniform Plumbing Code* except as otherwise *approved* by the Director of Public Health.

R332.12 Garbage disposal. Every *floating home moorage* shall be provided with adequate *garbage* storage and collection facilities, which shall be located in an accessible place on the moorage site. No garbage or refuse shall be thrown or dumped into the waters.

R332.13 Electrical service and wiring. Electrical service *approved* by City Light shall be provided to *floating homes* and *floating home moorages*. Electrical wiring and *equipment* in every *floating home* shall conform to requirements of the *Seattle Electrical Code*. No *floating home* shall be permitted to connect or reconnect to the electric utility's distribution system unless *approved* for such connection by the *building official* in accordance with the *Seattle Electrical Code*.

R332.14 Housing standards for existing floating homes. Every *floating home* shall comply with the minimum housing standards of the *Seattle Housing and Building Maintenance Code* except as otherwise *approved* by the *building official* in accordance with the *Housing and Building Maintenance Code*.

R332.15 Property lines. The boundaries of *floating home moorage* sites shall be considered the *lot line* for determining compliance with Section R302.

Interpretation R332.15: For the purposes of determining the required wall and opening protection and roof-covering requirements, distance shall be measured to the *exterior wall* of the home, and not to the float.

R332.16 Approval of moorage site plan required. Every *floating home moorage* shall continuously conform to a moorage site plan that has been *approved* by the *building official*. Such approval shall be obtained as follows: Three copies of the site plan, drawn to scale and completely dimensioned, and setting forth the address and legal description of the property on which the moorage is located and the name and address of the owner or operator of the moorage, shall be filed with the *building official*.

The moorage site plan shall show:

1. The dimensions of the *floating home moorage* site;
2. The location of abutting public waterways;
3. The location and dimensions of private waterways and land access to the moorage;
4. The location and identification of individual *floating home sites;*
5. The location and dimensions of off-street parking spaces;
6. The location and dimensions of walkways and any *accessory structures* or facilities;
7. The water service system;
8. The local side sewer system; and
9. The electrical service and lighting system.

The site plan shall be reviewed by the code official, the Fire Chief, the Director of Public Health, the Director of Seattle Public Utilities and the Director of Transportation for conformance with the requirements of this code and other applicable ordinances. Upon approval by the *building official*, one copy of the *approved* site plan shall be retained in the office of the *building*

DRAFT

official, one copy in the office of the Director of Public Health and one copy, which shall be maintained on the premises of the *floating home moorage*, shall be returned to the owner or operator.

R332.17 Moorage register of ownership. Every owner or operator of a *floating home moorage* shall maintain a current register of every *floating home* moored on the premises, such register to record the name and address of the legal owner of each *floating home* and the registration number assigned to it by the King County Assessor. A copy of the register shall be made available upon request to any City department referred to in this chapter.

[S] SECTION R333
SECURITY FROM CRIMINAL ACTIVITY

R333.1 Building entrance locks. Building entrance doors, including garage doors, shall be capable of locking. They shall be equipped with a dead-locking latch bolt with at least a 1/2 inch throw that penetrates the striker not less than 1/4 inch. Building entrance doors shall be openable from the inside without use of a key or special knowledge or effort.

Exception: Garage-to-exterior doors are permitted to be equipped with an electronically-operated remote control device for opening and closing in lieu of a dead-locking latch bolt. When garage-to-exterior doors are equipped with remote control devices, garage-to-building doors need not be capable of locking.

R333.2 Observation ports. Every building entrance door, other than garage doors, shall have a visitor observation port or glass side light. Observation ports shall be installed at a height of not less than 54 inches (1372 mm) and not more than 66 inches (1676 mm) from the floor.

R333.3 Windows and sliding doors. Dead bolts or other *approved* locking devices shall be provided on all sliding doors and openable windows. The lock shall be installed so that the mounting screws for the lock case are inaccessible from the outside.

Exception: Windows with sills located 10 feet (3048 mm) or more above grade, or 10 feet or more above a deck, balcony or porch that is not *readily accessible* from grade except through a housing unit need not have operable inside latching devices.

R333.4 Alternate security devices. Subject to the approval of the *building official*, alternate security devices are permitted to be substituted for those required by this section. Alternate devices must have equal capability to resist illegal entry. The installation of the device shall not conflict with other requirements of this code and other ordinances regulating the safety of exiting.

DRAFT

[S] SECTION R334
SOUND TRANSMISSION CONTROL

R334.1 General. Wall and floor-ceiling assemblies separating *dwelling units* shall provide sound insulation in accordance with this Section R334.

R334.1.1 Perimeter joints. Joints in the perimeter of such separating wall or floor-ceiling assembly shall be acoustically sealed with a permanent resilient material *approved* for the purpose. The separating wall or floor-ceiling assembly shall extend completely to and be sealed to another separating assembly or an *exterior wall*, roof or floor assembly.

R334.1.2 Penetrations. Conduits, ducts, pipes and vents within the wall or floor-ceiling assembly causing vibration shall be reasonably isolated from the building construction at points of support by means of resilient sleeves, mounts or underlayments. All other openings through which such conduits, ducts, pipes or vents pass shall have the excess opening fully sealed with insulative and permanently resilient materials *approved* for the purpose.

R334.1.3 Fire-resistance ratings. Design and materials for sound transmission control shall not impair the fire-resistance rating of separating walls or floor-ceiling assemblies required to be of fire-resistance-rated construction.

R334.2 Airborne sound. Airborne sound insulation for wall and floor-ceiling assemblies shall meet a Sound Transmission Class (STC) rating of 45 when tested in accordance with ASTM E 90.

R334.2.1 Outlet boxes. Electrical outlet boxes shall not be placed back-to-back and shall be offset by not less than 12 inches (305 mm) from outlets in the opposite wall surface. The back and sides of boxes shall be sealed with 1/8 inch resilient sealant and backed by a minimum of 2 inch thick mineral fiber insulation or *approved* equivalent.

R334.3 Structural-borne sound. Floor-ceiling assemblies between *dwelling units* or between a *dwelling unit* and a public or service area within a structure shall have an Impact Insulation Class (IIC) rating of not less than 50 when tested in accordance with ASTM E 492. Floor covering may be included in the assembly to obtain the required ratings.

Exception: Floor assemblies in bathrooms are not required to meet the IIC rating of 50 where structural concrete floor systems are used.

R334.4 Tested assemblies. Field- or laboratory-tested wall or floor-ceiling designs having an STC or IIC of 50 or more may be used without additional field testing when, in the opinion of the *building official*, the tested design has not been compromised by flanking paths. Tests may be required by the *building official* when evidence of compromised separations is noted. Wall or floor-ceiling designs field tested by ASTM E 336 having a minimum FSTC or FIIC rating of 45 may be used.

R334.5 Field testing and certification. Field testing, when permitted to determine airborne sound transmission or impact sound insulation class, shall be done in accordance with ASTM E 492 under the supervision of an acoustical professional who is experienced in the field of acoustical testing and engineering and who shall forward certified test results to the *building official* that minimum sound insulation requirements stated above have been met.

R334.6 Sound transmission control systems. Generic systems *listed* in GA 600 may be accepted where a laboratory test indicates that the requirements of Section R334 are met by the system.

DRAFT

R401.4.2 Compressible or shifting soil. Instead of a complete geotechnical evaluation, where top or subsoils are compressible or shifting, they shall be removed to a depth and width sufficient to ensure stable moisture content in each active zone and shall not be used as fill or stabilized within each active zone by chemical, dewatering or presaturation.

[S] R401.5 Protection of adjoining property. Adjoining public and private property shall be protected from damage during construction, remodeling and demolition work. Protection shall be provided for footings, foundations, party walls, chimneys, skylights and roofs. Provisions shall be made to control water runoff and erosion during construction or demolition activities. When the existing grade of a site is altered by filling, excavating, dredging or moving of earth materials, the owner shall protect all adjoining property during construction from encroachment or collapse by sloping the sides of the temporary grading at a slope that is safe and not more than one horizontal to one vertical. In addition, adjoining property shall be protected from encroachment or collapse by sloping the sides of the permanent grading at a slope not greater than two horizontal to one vertical. The *building official* is authorized to approve temporary or permanent slopes that are steeper based on a design by an experienced geotechnical engineer.

In areas of known unsuitable soils, the *building official* is authorized to require slopes that are less steep to assure protection of adjoining property.

SECTION R402
MATERIALS

R402.1 Wood foundations. Wood foundation systems shall be designed and installed in accordance with the provisions of this code.

R402.1.1 Fasteners. Fasteners used below *grade* to attach plywood to the exterior side of exterior *basement* or crawlspace wall studs, or fasteners used in knee wall construction, shall be of Type 304 or 316 stainless steel. Fasteners used above *grade* to attach plywood and all lumber-to-lumber fasteners except those used in knee wall construction shall be of Type 304 or 316 stainless steel, silicon bronze, copper, hot-dipped galvanized (zinc coated) steel nails, or hot-tumbled galvanized (zinc coated) steel nails. Electro-galvanized steel nails and galvanized (zinc coated) steel staples shall not be permitted.

R402.1.2 Wood treatment. Lumber and plywood shall be pressure-preservative treated and dried after treatment in accordance with AWPA U1 (Commodity Specification A, Special Requirement 4.2), and shall bear the *label* of an accredited agency. Where lumber or plywood is cut or drilled after treatment, the treated surface shall be field treated with copper naphthenate, the concentration of which shall contain not less than 2-percent copper metal, by repeated brushing, dipping or soaking until the wood cannot absorb more preservative.

R402.2 Concrete. Concrete shall have a minimum specified compressive strength of f'_c, as shown in Table R402.2. Concrete subject to moderate or severe weathering as indicated in Table R301.2(1) shall be air entrained as specified in Table R402.2. The maximum weight of fly ash, other pozzolans, silica fume, slag or blended cements that is included in concrete mixtures for garage floor slabs and for exterior porches, carport slabs and steps that will be exposed to deicing chemicals shall not exceed the percentages of the total weight of cementitious materials specified in Section 19.3.3.4 of ACI 318. Materials used to produce concrete and testing thereof shall comply with the applicable standards listed in Chapters 19 and 20 of ACI 318 or ACI 332.

Code Alternate R402.2: Five-sack 2000 psi (13 790 kPa) and 5-1/2-sack 2500 psi (17 237 kPa) concrete mixes in accordance with *International Building Code* Section 1904.2 are equivalent to 3000 psi (20 684 kPa) concrete for weathering potential. In addition, air-entrainment is not required to address weathering.

TABLE R402.2
MINIMUM SPECIFIED COMPRESSIVE STRENGTH OF CONCRETE

TYPE OR LOCATION OF CONCRETE CONSTRUCTION	MINIMUM SPECIFIED COMPRESSIVE STRENGTH[a] (f'_c)		
	Weathering Potential[b]		
	Negligible	Moderate	Severe
Basement walls, foundations and other concrete not exposed to the weather	2,500	2,500	2,500[c]
Basement slabs and interior slabs on grade, except garage floor slabs	2,500	2,500	2,500[c]
Basement walls, foundation walls, exterior walls and other vertical concrete work exposed to the weather	2,500	3,000[d]	3,000[d]
Porches, carport slabs and steps exposed to the weather, and garage floor slabs	2,500	3,000[d, e, f]	3,500[d, e, f]

For SI: 1 pound per square inch = 6.895 kPa.
a. Strength at 28 days psi.
b. See Table R301.2(1) for weathering potential.
c. Concrete in these locations that is subject to freezing and thawing during construction shall be air-entrained concrete in accordance with Footnote d.
d. Concrete shall be air-entrained. Total air content (percent by volume of concrete) shall be not less than 5 percent or more than 7 percent.
e. See Section R402.2 for maximum cementitious materials content.

DRAFT

3. Decks not supported by a dwelling need not be provided with footings that extend below the frost line.

R403.1.5 Slope. The top surface of footings shall be level. The bottom surface of footings shall not have a slope exceeding one unit vertical in 10 units horizontal (10-percent slope). Footings shall be stepped where it is necessary to change the elevation of the top surface of the footings or where the slope of the bottom surface of the footings will exceed one unit vertical in 10 units horizontal (10-percent slope).

[W] R403.1.6 Foundation anchorage. Wood sill plates and wood walls supported directly on continuous foundations shall be anchored to the foundation in accordance with this section.

Cold-formed steel framing shall be anchored directly to the foundation or fastened to wood sill plates in accordance with Section R505.3.1 or R603.3.1, as applicable. Wood sill plates supporting cold-formed steel framing shall be anchored to the foundation in accordance with this section.

Wood sole plates at all exterior walls on monolithic slabs, wood sole plates of *braced wall panels* at building interiors on monolithic slabs and all wood sill plates shall be anchored to the foundation with minimum 1/2-inch- diameter (12.7 mm) anchor bolts spaced not greater than 6 feet (1829 mm) on center or *approved* anchors or anchor straps spaced as required to provide equivalent anchorage to 1/2-inch-diameter (12.7 mm) anchor bolts. Bolts shall extend not less than 7 inches (178 mm) into concrete or grouted cells of concrete masonry units. The bolts shall be located in the middle third of the width of the plate. A nut and washer shall be tightened on each anchor bolt. There shall be not fewer than two bolts per plate section with one bolt located not more than 12 inches (305 mm) or less than seven bolt diameters from each end of the plate section. Interior bearing wall sole plates on monolithic slab foundation that are not part of a *braced wall panel* shall be positively anchored with *approved* fasteners. Sill plates and sole plates shall be protected against decay and termites where required by Sections R317 and R318. Anchor bolts shall be permitted to be located while concrete is still plastic and before it has set. Where anchor bolts resist placement or the consolidation of concrete around anchor bolts is impeded, the concrete shall be vibrated to ensure full contact between the anchor bolts and concrete.

Exceptions:

1. Walls 24 inches (610 mm) total length or shorter connecting offset braced wall panels shall be anchored to the foundation with not fewer than one anchor bolt located in the center third of the plate section and shall be attached to adjacent braced wall panels at corners as shown in Item 9 of Table R602.3(1).
2. Connection of walls 12 inches (305 mm) total length or shorter connecting offset *braced wall panels* to the foundation without anchor bolts shall be permitted. The wall shall be attached to adjacent braced wall panels at corners as shown in Item 9 of Table R602.3(1).

R403.1.6.1 Foundation anchorage in Seismic Design Categories C, D_0, D_1 and D_2. In addition to the requirements of Section R403.1.6, the following requirements shall apply to wood light-frame structures in Seismic Design Categories D_0, D_1 and D_2 and wood light-frame townhouses in Seismic Design Category C.

1. Plate washers conforming to Section R602.11.1 shall be provided for all anchor bolts over the full length of required *braced wall lines* except where *approved* anchor straps are used. Properly sized cut washers shall be permitted for anchor bolts in wall lines not containing *braced wall panels*.
2. Interior braced wall plates shall have anchor bolts spaced at not more than 6 feet (1829 mm) on center and located within 12 inches (305 mm) of the ends of each plate section where supported on a continuous foundation.
3. Interior bearing wall sole plates shall have anchor bolts spaced at not more than 6 feet (1829 mm) on center and located within 12 inches (305 mm) of the ends of each plate section where supported on a continuous foundation.
4. The maximum anchor bolt spacing shall be 4 feet (1219 mm) for buildings over two stories in height.
5. Stepped cripple walls shall conform to Section R602.11.2.
6. Where continuous wood foundations in accordance with Section R404.2 are used, the force transfer shall have a capacity equal to or greater than the connections required by Section R602.11.1 or the *braced wall panel* shall be connected to the wood foundations in accordance with the *braced wall panel*-to-floor fastening requirements of Table R602.3(1).

R403.1.7 Footings on or adjacent to slopes. The placement of buildings and structures on or adjacent to slopes steeper than one unit vertical in three units horizontal (33.3-percent slope) shall conform to Sections R403.1.7.1 through R403.1.7.4.

R403.1.7.1 Building clearances from ascending slopes. In general, buildings below slopes shall be set a sufficient distance from the slope to provide protection from slope drainage, erosion and shallow failures. Except as provided in Section R403.1.7.4 and Figure R403.1.7.1, the following criteria will be assumed to provide this protection. Where the existing slope is steeper than one unit vertical in one unit horizontal (100-percent slope), the toe of the slope shall be assumed to be at the intersection of a horizontal plane drawn from the top of the foundation and a plane drawn tangent to the slope at an angle of 45 degrees (0.79 rad) to the horizontal. Where a retaining wall is constructed at the toe of the slope, the height of the slope shall be measured from the top of the wall to the top of the slope.

DRAFT

R404.1.3.3.1 Compressive strength. The minimum specified compressive strength of concrete, f'_c, shall comply with Section R402.2 and shall be not less than 2,500 psi (17.2 MPa) at 28 days in buildings assigned to Seismic Design Category A, B or C and 3000 psi (20.5 MPa) in buildings assigned to Seismic Design Category D_0, D_1 or D_2.

R404.1.3.3.2 Concrete mixing and delivery. Mixing and delivery of concrete shall comply with ASTM C94 or ASTM C685.

R404.1.3.3.3 Maximum aggregate size. The nominal maximum size of coarse aggregate shall not exceed one-fifth the narrowest distance between sides of forms, or three-fourths the clear spacing between reinforcing bars or between a bar and the side of the form.

Exception: Where *approved*, these limitations shall not apply where removable forms are used and workability and methods of consolidation permit concrete to be placed without honeycombs or voids.

R404.1.3.3.4 Proportioning and slump of concrete. Proportions of materials for concrete shall be established to provide workability and consistency to permit concrete to be worked readily into forms and around reinforcement under conditions of placement to be employed, without segregation or excessive bleeding. Slump of concrete placed in removable forms shall not exceed 6 inches (152 mm).

Exception: Where *approved*, the slump is permitted to exceed 6 inches (152 mm) for concrete mixtures that are resistant to segregation, and are in accordance with the form manufacturer's recommendations.

Slump of concrete placed in stay-in-place forms shall exceed 6 inches (152 mm). Slump of concrete shall be determined in accordance with ASTM C143.

R404.1.3.3.5 Consolidation of concrete. Concrete shall be consolidated by suitable means during placement and shall be worked around embedded items and reinforcement and into corners of forms. Where stay-in-place forms are used, concrete shall be consolidated by internal vibration.

Exception: Where *approved* for concrete to be placed in stay-in-place forms, self-consolidating concrete mixtures with slumps equal to or greater than 8 inches (203 mm) that are specifically designed for placement without internal vibration need not be internally vibrated.

[W] R404.1.3.3.6 Form materials and form ties. Forms shall be made of wood, steel, aluminum, plastic, a composite of cement and foam insulation, a composite of cement and wood chips, or other *approved* material suitable for supporting and containing concrete. Forms shall be positioned and secured before placing concrete and shall provide sufficient strength to contain concrete during the concrete placement operation.

Form ties shall be steel, solid plastic, foam plastic, a composite of cement and wood chips, a composite of cement and foam plastic, or other suitable material capable of resisting the forces created by fluid pressure of fresh concrete.

R404.1.3.3.6.1 Stay-in-place forms. Stay-in-place concrete forms shall comply with this section.

1. Surface burning characteristics. The flame-spread index and smoke-developed index of forming material, other than foam plastic, left exposed on the interior shall comply with Section R302. The surface burning characteristics of foam plastic used in insulating concrete forms shall comply with Section R316.3.
2. Interior covering. Stay-in-place forms constructed of rigid foam plastic shall be protected on the interior of the building as required by Section R316. Where gypsum board is used to protect the foam plastic, it shall be installed with a mechanical fastening system. Use of adhesives in addition to mechanical fasteners is permitted.
3. Exterior wall covering. Stay-in-place forms constructed of rigid foam plastics shall be protected from sunlight and physical damage by the application of an approved exterior wall covering complying with this code. Exterior surfaces of other stay-in-place forming systems shall be protected in accordance with this code.
4. Termite protection. In areas where the probability of termite infestation is "very heavy" as indicated by Table R301.2(1) or Figure R301.2(7), foam plastic insulation shall be permitted below grade on foundation walls in accordance with Section R318.4.
5. Flat ICF wall system forms shall conform to ASTM E2634.

R404.1.3.3.7 Reinforcement.

R404.1.3.3.7.1 Steel reinforcement. Steel reinforcement shall comply with the requirements of ASTM A615, A706, or A996. ASTM A996 bars produced from rail steel shall be Type R. In buildings assigned to Seismic Design Category A, B or C, the minimum yield strength of reinforcing steel shall be 40,000 psi (Grade 40) (276 MPa). In buildings assigned to Seismic Design Category D_0, D_1 or D_2, reinforcing steel shall comply with the requirements of ASTM A706 for low-alloy steel with a minimum yield strength of 60,000 psi (Grade 60) (414 MPa).

R404.1.3.3.7.2 Location of reinforcement in wall. The center of vertical reinforcement in *basement* walls determined from Tables R404.1.2(2) through R404.1.2(7) shall be located at the centerline of the wall. Vertical reinforcement in *basement* walls determined from Table R404.1.2(8) shall be located to provide a maximum cover of 1-1/4

DRAFT

SECTION R407
COLUMNS

R407.1 Wood column protection. Wood columns shall be protected against decay as set forth in Section R317.

R407.2 Steel column protection. All surfaces (inside and outside) of steel columns shall be given a shop coat of rust-inhibitive paint, except for corrosion-resistant steel and steel treated with coatings to provide corrosion resistance.

R407.3 Structural requirements. The columns shall be restrained to prevent lateral displacement at the bottom end. Wood columns shall be not less in nominal size than 4 inches by 4 inches (102 mm by 102 mm). Steel columns shall be not less than 3-inch-diameter (76 mm) Schedule 40 pipe manufactured in accordance with ASTM A53 Grade B or *approved* equivalent.

Exception: In Seismic Design Categories A, B and C, columns not more than 48 inches (1219 mm) in height on a pier or footing are exempt from the bottom end lateral displacement requirement within under-floor areas enclosed by a continuous foundation.

SECTION R408
UNDER-FLOOR SPACE

[W] R408.1 Ventilation. The under-floor space between the bottom of the floor joists and the earth under any building (except space occupied by a *basement*) shall have ventilation openings through foundation walls or exterior walls. ((~~The minimum net area of ventilation openings shall be not less than 1 square foot (0.0929 m²) for each 150 square feet (14 m²) of under-floor space area, unless the ground surface is covered by a Class 1 vapor retarder material. Where a Class 1 vapor retarder material is used, the minimum net area of ventilation openings shall be not less than 1 square foot (0.0929 m²) for each 1,500 square feet (140 m²) of under-floor space area. One such ventilating opening shall be within 3 feet (914 mm) of each corner of the building.~~)) A ground cover of six mil (0.006 inch thick) black polyethylene or *approved* equal shall be laid over the ground within crawl spaces. The ground cover shall be overlapped six inches minimum at the joints and shall extend to the foundation wall.

Exception: The ground cover may be omitted in crawl spaces if the crawl space has a concrete slab floor with a minimum thickness of two inches.

[W] R408.2 Openings for under-floor ventilation. The minimum net area of ventilation openings shall be not less than 1 square foot (0.0929 m^2) for each ((~~150~~)) 300 square feet (((~~14~~)) 28 m^2) of under-floor area. ((~~One ventilation opening shall be within 3 feet (915 mm) of each corner of the building.~~)) Required openings shall be evenly placed to provide cross ventilation of the space except one side of the building shall be permitted to have no ventilation openings. Ventilation openings shall be covered for their height and width with any of the following materials provided that the least dimension of the covering shall not exceed 1/4 inch (6.4 mm):

1. Perforated sheet metal plates not less than 0.070 inch (1.8 mm) thick.
2. Expanded sheet metal plates not less than 0.047 inch (1.2 mm) thick.
3. Cast-iron grill or grating.
4. Extruded load-bearing brick vents.
5. Hardware cloth of 0.035 inch (0.89 mm) wire or heavier.
6. Corrosion-resistant wire mesh, with the least dimension being 1/8 inch (3.2 mm) thick.

Exception: The total area of ventilation openings shall be permitted to be reduced to 1/1,500 of the under-floor area where the ground surface is covered with an *approved* Class I vapor retarder material and the required openings are placed to provide cross ventilation of the space. The installation of operable louvers shall not be prohibited.

[W] R408.3 Unvented crawl space. Ventilation openings in under-floor spaces specified in Sections R408.1 and R408.2 shall not be required where the following items are provided:

1. Exposed earth is covered with a continuous Class I vapor retarder. Joints of the vapor retarder shall overlap by 6 inches (152 mm) and shall be sealed or taped. The edges of the vapor retarder shall extend not less than 6 inches (152 mm) up the stem wall and shall be attached and sealed to the stem wall ((~~or insulation.~~)) and a radon system shall be installed that meets the requirements of Appendix F;

((~~2. One of the following is provided for the under-floor space:~~

~~2.1. Continuously operated mechanical exhaust ventilation at a rate equal to 1 cubic foot per minute (0.47 L/s) for each 50 square feet (4.7 m²) of *crawl space* floor area, including an air pathway to the common area (such as a duct or transfer grille), and perimeter walls insulated in accordance with Section N1102.2.11 of this code.~~

~~2.2. *Conditioned air* supply sized to deliver at a rate equal to 1 cubic foot per minute (0.47 L/s) for each 50 square feet (4.7 m²) of under-floor area, including a return air pathway to the common area (such as a duct or transfer grille), and perimeter walls insulated in accordance with Section N1102.2.11 of this code.~~

~~2.3. Plenum in existing structures complying with Section M1601.5, if under-floor space is used as a plenum.~~

DRAFT

~~2.4. Dehumidification sized to provide 70 pints (33 liters) of moisture removal per day for every 1,000 square feet (93 m²) of *crawl space* floor area.~~))

2. Continuously operated mechanical exhaust ventilation is provided at a rate equal to 1 cubic foot per minute (0.47 L/s) for each 50 square feet (4.7 m²) of crawlspace floor area. Exhaust ventilation shall terminate to the exterior.

   Exception: *Plenums* in existing structures complying with Section M1601.5, if under-floor space is used as a plenum.

R408.4 Access. Access shall be provided to all under-floor spaces. Access openings through the floor shall be not smaller than 18 inches by 24 inches (457 mm by 610 mm). Openings through a perimeter wall shall be not less than 16 inches by 24 inches (407 mm by 610 mm). Where any portion of the through-wall access is below *grade*, an areaway not less than 16 inches by 24 inches (407 mm by 610 mm) shall be provided. The bottom of the areaway shall be below the threshold of the access opening. Through wall access openings shall not be located under a door to the residence. See Section M1305.1.4 for access requirements where mechanical *equipment* is located under floors.

R408.5 Removal of debris. The under-floor *grade* shall be cleaned of all vegetation and organic material. Wood forms used for placing concrete shall be removed before a building is occupied or used for any purpose. Construction materials shall be removed before a building is occupied or used for any purpose.

R408.6 Finished grade. The finished *grade* of under-floor surface shall be permitted to be located at the bottom of the footings; however, where there is evidence that the groundwater table can rise to within 6 inches (152 mm) of the finished floor at the building perimeter or where there is evidence that the surface water does not readily drain from the building site, the *grade* in the under-floor space shall be as high as the outside finished *grade*, unless an *approved* drainage system is provided.

R408.7 Flood resistance. For buildings located in flood hazard areas as established in Table R301.2(1):

1. Walls enclosing the under-floor space shall be provided with flood openings in accordance with Section R322.2.2.
2. The finished ground level of the under-floor space shall be equal to or higher than the outside finished ground level on at least one side.

   Exception: Under-floor spaces that meet the requirements of FEMA TB 11-1.

DRAFT

SECTION R506
CONCRETE FLOORS (ON GROUND)

R506.1 General. Concrete slab-on-ground floors shall be designed and constructed in accordance with the provisions of this section or ACI 332. Floors shall be a minimum 3-1/2 inches (89 mm) thick (for expansive soils, see Section R403.1.8). The specified compressive strength of concrete shall be as set forth in Section R402.2.

R506.2 Site preparation. The area within the foundation walls shall have all vegetation, top soil and foreign material removed.

R506.2.1 Fill. Fill material shall be free of vegetation and foreign material. The fill shall be compacted to ensure uniform support of the slab, and except where *approved*, the fill depths shall not exceed 24 inches (610 mm) for clean sand or gravel and 8 inches (203 mm) for earth.

R506.2.2 Base. A 4-inch-thick (102 mm) base course consisting of clean graded sand, gravel, crushed stone, crushed concrete or crushed blast-furnace slag passing a 2-inch (51 mm) sieve shall be placed on the prepared subgrade where the slab is below *grade*.

Exception: A base course is not required where the concrete slab is installed on well-drained or sand-gravel mixture soils classified as Group I according to the United Soil Classification System in accordance with Table R405.1.

R506.2.3 Vapor retarder. A 6-mil (0.006 inch; 152 μm) polyethylene or *approved* vapor retarder with joints lapped not less than 6 inches (152 mm) shall be placed between the concrete floor slab and the base course or the prepared subgrade where a base course does not exist.

Exception: The vapor retarder is not required for the following:

1. Garages, utility buildings and other unheated *accessory structures*.
2. For unheated storage rooms having an area of less than 70 square feet (6.5 m^2) and carports.
3. Driveways, walks, patios and other flatwork not likely to be enclosed and heated at a later date.
4. Where *approved* by the *building official*, based on local site conditions.

R506.2.4 Reinforcement support. Where provided in slabs-on-ground, reinforcement shall be supported to remain in place from the center to upper one-third of the slab for the duration of the concrete placement.

DRAFT

SECTION R507
EXTERIOR DECKS

[W] R507.1 Decks. Wood-framed decks shall be in accordance with this section. Decks shall be designed for the live load required in Section R301.5 or the ground snow load indicated in Table R301.2(1), whichever is greater. For decks using materials and conditions not prescribed in this section, refer to Section R301.

R507.2 Materials. Materials used for the construction of decks shall comply with this section.

R507.2.1 Wood materials. Wood materials shall be No. 2 grade or better lumber, preservative-treated in accordance with Section R317, or *approved*, naturally durable lumber, and termite protected where required in accordance with Section R318. Where design in accordance with Section R301 is provided, wood structural members shall be designed using the wet service factor defined in AWC NDS. Cuts, notches and drilled holes of preservative-treated wood members shall be treated in accordance with Section R317.1.1. All preservative-treated wood products in contact with the ground shall be labeled for such usage.

R507.2.1.1 Engineered wood products. Engineered wood products shall be in accordance with Section R502.

R507.2.2 Plastic composite deck boards, stair treads, guards, or handrails. Plastic composite exterior deck boards, stair treads, guards and handrails shall comply with the requirements of ASTM D7032 and this section.

R507.2.2.1 Labeling. Plastic composite deck boards and stair treads, or their packaging, shall bear a label that indicates compliance with ASTM D7032 and includes the allowable load and maximum allowable span determined in accordance with ASTM D7032. Plastic or composite handrails and guards, or their packaging, shall bear a label that indicates compliance with ASTM D7032 and includes the maximum allowable span determined in accordance with ASTM D7032.

R507.2.2.2 Flame spread index. Plastic composite deck boards, stair treads, guards, and handrails shall exhibit a flame spread index not exceeding 200 when tested in accordance with ASTM E84 or UL 723 with the test specimen remaining in place during the test.

Exception: Plastic composites determined to be noncombustible.

R507.2.2.3 Decay resistance. Plastic composite deck boards, stair treads, guards and handrails containing wood, cellulosic or other biodegradable materials shall be decay resistant in accordance with ASTM D7032.

[W] ((~~TABLE R507.3.1~~
~~MINIMUM FOOTING SIZE FOR DECKS~~

~~LIVE OR GROUND SNOW LOAD[b] (psf)~~	~~TRIBUTARY AREA (sq. ft.)~~	~~LOAD BEARING VALUE OF SOILS[a, c, d] (psf)~~											
		~~1500[e]~~			~~2000[e]~~			~~2500[e]~~			~~≥ 3000[e]~~		
		~~Side of a square footing (inches)~~	~~Diameter of a round footing (inches)~~	~~Thickness (inches)~~	~~Side of a square footing (inches)~~	~~Diameter of a round footing (inches)~~	~~Thickness (inches)~~	~~Side of a square footing (inches)~~	~~Diameter of a round footing (inches)~~	~~Thickness (inches)~~	~~Side of a square footing (inches)~~	~~Diameter of a round footing (inches)~~	~~Thickness (inches)~~
~~40~~	~~20~~	~~12~~	~~14~~	~~6~~	~~12~~	~~14~~	~~6~~	~~12~~	~~14~~	~~6~~	~~12~~	~~14~~	~~6~~
	~~40~~	~~14~~	~~16~~	~~6~~	~~12~~	~~14~~	~~6~~	~~12~~	~~14~~	~~6~~	~~12~~	~~14~~	~~6~~
	~~60~~	~~17~~	~~19~~	~~6~~	~~15~~	~~17~~	~~6~~	~~13~~	~~15~~	~~6~~	~~12~~	~~14~~	~~6~~
	~~80~~	~~20~~	~~22~~	~~7~~	~~17~~	~~19~~	~~6~~	~~15~~	~~17~~	~~6~~	~~14~~	~~16~~	~~6~~
	~~100~~	~~22~~	~~25~~	~~8~~	~~19~~	~~21~~	~~6~~	~~17~~	~~19~~	~~6~~	~~15~~	~~17~~	~~6~~
	~~120~~	~~24~~	~~27~~	~~9~~	~~21~~	~~23~~	~~7~~	~~19~~	~~21~~	~~6~~	~~17~~	~~19~~	~~6~~
	~~140~~	~~26~~	~~29~~	~~10~~	~~22~~	~~25~~	~~8~~	~~20~~	~~23~~	~~7~~	~~18~~	~~21~~	~~6~~
	~~160~~	~~28~~	~~31~~	~~11~~	~~24~~	~~27~~	~~9~~	~~21~~	~~24~~	~~8~~	~~20~~	~~22~~	~~7~~
~~50~~	~~20~~	~~12~~	~~14~~	~~6~~	~~12~~	~~14~~	~~6~~	~~12~~	~~14~~	~~6~~	~~12~~	~~14~~	~~6~~
	~~40~~	~~15~~	~~17~~	~~6~~	~~13~~	~~15~~	~~6~~	~~12~~	~~14~~	~~6~~	~~12~~	~~14~~	~~6~~
	~~60~~	~~19~~	~~21~~	~~6~~	~~16~~	~~18~~	~~6~~	~~14~~	~~16~~	~~6~~	~~13~~	~~15~~	~~6~~
	~~80~~	~~21~~	~~24~~	~~8~~	~~19~~	~~21~~	~~6~~	~~17~~	~~19~~	~~6~~	~~15~~	~~17~~	~~6~~
	~~100~~	~~24~~	~~27~~	~~9~~	~~21~~	~~23~~	~~7~~	~~19~~	~~21~~	~~6~~	~~17~~	~~19~~	~~6~~
	~~120~~	~~26~~	~~30~~	~~10~~	~~23~~	~~26~~	~~8~~	~~20~~	~~23~~	~~7~~	~~19~~	~~21~~	~~6~~
	~~140~~	~~28~~	~~32~~	~~11~~	~~25~~	~~28~~	~~9~~	~~22~~	~~25~~	~~8~~	~~20~~	~~23~~	~~7~~
	~~160~~	~~30~~	~~34~~	~~12~~	~~26~~	~~30~~	~~10~~	~~24~~	~~27~~	~~9~~	~~21~~	~~24~~	~~8~~
~~60~~	~~20~~	~~12~~	~~14~~	~~6~~	~~12~~	~~14~~	~~6~~	~~12~~	~~14~~	~~6~~	~~12~~	~~14~~	~~6~~
	~~40~~	~~16~~	~~19~~	~~6~~	~~14~~	~~16~~	~~6~~	~~13~~	~~14~~	~~6~~	~~12~~	~~14~~	~~6~~
	~~60~~	~~20~~	~~23~~	~~7~~	~~17~~	~~20~~	~~6~~	~~16~~	~~18~~	~~6~~	~~14~~	~~16~~	~~6~~
	~~80~~	~~23~~	~~26~~	~~9~~	~~20~~	~~23~~	~~7~~	~~18~~	~~20~~	~~6~~	~~16~~	~~19~~	~~6~~
	~~100~~	~~26~~	~~29~~	~~10~~	~~22~~	~~25~~	~~8~~	~~20~~	~~23~~	~~7~~	~~18~~	~~21~~	~~6~~
	~~120~~	~~28~~	~~32~~	~~11~~	~~25~~	~~28~~	~~9~~	~~22~~	~~25~~	~~8~~	~~20~~	~~23~~	~~7~~
	~~140~~	~~31~~	~~35~~	~~12~~	~~27~~	~~30~~	~~10~~	~~24~~	~~27~~	~~9~~	~~22~~	~~24~~	~~8~~
	~~160~~	~~33~~	~~37~~	~~13~~	~~28~~	~~32~~	~~11~~	~~25~~	~~29~~	~~10~~	~~23~~	~~26~~	~~9~~
~~70~~	~~20~~	~~12~~	~~14~~	~~6~~	~~12~~	~~14~~	~~6~~	~~12~~	~~14~~	~~6~~	~~12~~	~~14~~	~~6~~
	~~40~~	~~18~~	~~20~~	~~6~~	~~15~~	~~17~~	~~6~~	~~14~~	~~15~~	~~6~~	~~12~~	~~14~~	~~6~~
	~~60~~	~~21~~	~~24~~	~~8~~	~~19~~	~~21~~	~~6~~	~~17~~	~~19~~	~~6~~	~~15~~	~~17~~	~~6~~
	~~80~~	~~25~~	~~28~~	~~9~~	~~21~~	~~24~~	~~8~~	~~19~~	~~22~~	~~7~~	~~18~~	~~20~~	~~6~~
	~~100~~	~~28~~	~~31~~	~~11~~	~~24~~	~~27~~	~~9~~	~~21~~	~~24~~	~~8~~	~~20~~	~~22~~	~~7~~
	~~120~~	~~30~~	~~34~~	~~12~~	~~26~~	~~30~~	~~10~~	~~24~~	~~27~~	~~9~~	~~21~~	~~24~~	~~8~~
	~~140~~	~~33~~	~~37~~	~~13~~	~~28~~	~~32~~	~~11~~	~~25~~	~~29~~	~~10~~	~~23~~	~~26~~	~~9~~
	~~160~~	~~35~~	~~40~~	~~15~~	~~30~~	~~34~~	~~12~~	~~27~~	~~31~~	~~11~~	~~25~~	~~28~~	~~9~~

~~For SI: 1 inch = 25.4 mm, 1 square foot = 0.0929 m^2, 1 pound per square foot = 0.0479 kPa.~~

~~a. Interpolation permitted, extrapolation not permitted.~~

~~b. Based on highest load case: Dead + Live or Dead + Snow.~~

~~c. Assumes minimum square footing to be 12 inches × 12 inches × 6 inches for 6 × 6 post.~~

~~d. If the support is a brick or CMU pier, the footing shall have a minimum 2-inch projection on all sides.~~

~~e. Area, in square feet, of deck surface supported by post and footings.~~))

DRAFT

[W] TABLE R507.3.1
MINIMUM FOOTING SIZE FOR DECKS

LIVE OR GROUND SNOW LOAD (psf)	TRIBUTARY AREA[e] (sq. ft.)	SOIL BEARING CAPACITY[a, c, d]								
		1500 psf			2000 psf			≥ 3000 psf		
		Side of a square footing (inches)	Diameter of a round footing (inches)	Thickness[f] (inches)	Side of a square footing (inches)	Diameter of a round footing (inches)	Thickness[f] (inches)	Side of a square footing (inches)	Diameter of a round footing (inches)	Thickness[f] (inches)
60 live load or 70 ground snow load	5	7	8	6	7	8	6	7	8	6
	20	12	14	6	11	13	6	9	10	6
	40	18	20	6	15	17	6	12	14	6
	60	21	24	8	19	21	6	15	17	6
	80	25	28	9	21	24	8	18	20	6
	100	28	31	11	24	27	9	20	22	7
	120	30	34	12	26	30	10	21	24	8
	140	33	37	13	28	32	11	23	26	9
	160	35	40	15	30	34	12	25	28	9

For SI: 1 inch = 25.4 mm, 1 square foot = 0.0929 m2, 1 pound per square foot = 0.0479 kPa.
a. Interpolation permitted, extrapolation not permitted.
b. RESERVED.
c. Footing dimensions shall allow complete bearing of the post.
d. If the support is a brick or CMU pier, the footing shall have a minimum 2-inch projection on all sides.
e. Area, in square feet, of deck surface supported by post and footings.
f. Minimum thickness shall only apply to plain concrete footings.

R507.3.2 Minimum depth. Deck footings shall extend below the frost line specified in Table R301.2(1) in accordance with Section R403.1.4.1.

Exceptions:

1. Free-standing decks that meet all of the following criteria:
   1.1. The joists bear directly on precast concrete pier blocks at grade without support by beams or posts.
   1.2. The area of the deck does not exceed 200 square feet (18.9 m^2).
   1.3. The walking surface is not more than 20 inches (616 mm) above grade at any point within 36 inches (914 mm) measured horizontally from the edge.
2. Free-standing decks need not be provided with footings that extend below the frost line.

[W] R507.4 Deck posts. For single-level ((~~wood-framed~~)) decks, ((~~with beams sized in accordance with Table R507.5, deck~~)) wood post size shall be in accordance with Table R507.4.

[W] ((~~TABLE R507.4~~
~~DECK POST HEIGHT~~ [a]

~~DECK POST SIZE~~	~~MAXIMUM HEIGHT[a, b] (feet-inches)~~
~~4 × 4~~	~~6-9[c]~~
~~4 × 6~~	~~8~~
~~6 × 6~~	~~14~~
~~8 × 8~~	~~14~~

~~For SI: 1 inch = 25.4 mm, 1 foot = 304.8 mm,~~
~~1 pound per square foot = 0.0479 kPa.~~
~~a. Measured to the underside of the beam.~~
~~b. Based on 40 psf live load.~~
~~c. The maximum permitted height is 8 feet for one-ply and two-ply beams. The maximum permitted height for three-ply beams on post cap is 6 feet 9 inches.~~))

DRAFT

[W] TABLE R507.4
DECK POST HEIGHT

LOADS[b] (psf)	POST SPECIES[c]	POST SIZE[d]	MAXIMUM DECK POST HEIGHT[a] (feet-inches) TRIBUTARY AREA[g,h] (sq ft)							
			20	40	60	80	100	120	140	160
60 Live Load, ≤ 60 Ground Snow Load	Douglas Fir[e], Hem-fir[e], SPF[e]	4 × 4	14-0	10-10	8-7	7-0	5-8	4-1	NP	NP
		4 × 6	14-0	13-10	11-1	9-5	8-2	7-3	6-4	5-4
		6 × 6	14-0	14-0	14-0	14-0	14-0	13-3	10-9	6-11
		8 × 8	14-0	14-0	14-0	14-0	14-0	14-0	14-0	14-0
	Redwood[f], Western Cedars[f], Ponderosa Pine[f], Red Pine[f]	4 × 4	14-0	10-3	7-0	NP	NP	NP	NP	NP
		4 × 6	14-0	13-6	10-6	8-4	5-10	NP	NP	NP
		6 × 6	14-0	14-0	14-0	14-0	11-11	NP	NP	NP
		8 × 8	14-0	14-0	14-0	14-0	14-0	14-0	14-0	14-0
70 Ground Snow Load	Douglas Fir[e], Hem-fir[e], SPF[e]	4 × 4	14-0	10-1	7-11	6-6	5-3	3-7	NP	NP
		4 × 6	14-0	12-10	10-3	8-9	7-7	6-8	5-10	4-11
		6 × 6	14-0	14-0	14-0	14-0	14-0	12-2	9-9	5-9
		8 × 8	14-0	14-0	14-0	14-0	14-0	14-0	14-0	14-0
	Redwood[f], Western Cedars[f], Ponderosa Pine[f], Red Pine[f]	4 × 4	14-0	9-5	6-5	NP	NP	NP	NP	NP
		4 × 6	14-0	12-6	9-8	7-7	5-3	NP	NP	NP
		6 × 6	14-0	14-0	14-0	14-0	10-8	NP	NP	NP
		8 × 8	14-0	14-0	14-0	14-0	14-0	14-0	14-0	14-0

For SI: 1 inch = 25.4mm, 1 square foot = 0.0929 m^2, 1 psf = 0.0479 kPa. NP = Not Permitted

a. Measured from the underside of the beam to top of footing or pier.
b. 10 psf dead load. Snow load not assumed to be concurrent with live load.
c. No. 2 grade, wet service factor included.
d. Notched deck posts shall be sized to accommodate beam size in accordance with Section R507.5.2
e. Includes incising factor.
f. Incising factor not included.
g. Area, in square feet, of deck surface supported by post and footings.
h. Interpolation permitted. Extrapolation is not permitted.

DRAFT

R507.4.1 Deck post to deck footing connection. Where posts bear on concrete footings in accordance with Section R403 and Figure R507.4.1, lateral restraint shall be provided by manufactured connectors or a minimum post embedment of 12 inches (305 mm) in surrounding soils or concrete piers. Other footing systems shall be permitted.

Exception: Where expansive, compressible, shifting or other questionable soils are present, surrounding soils shall not be relied on for lateral support.

R507.5 Deck Beams. Maximum allowable spans for wood deck beams, as shown in Figure R507.5, shall be in accordance with Table R507.5. Beam plies shall be fastened with two rows of 10d (3-inch × 0.128-inch) nails minimum at 16 inches (406 mm) on center along each edge. Beams shall be permitted to cantilever at each end up to one-fourth of the allowable beam span. Deck beams of other materials shall be permitted where designed in accordance with accepted engineering practices.

[W] ((~~TABLE R507.5~~
~~DECK BEAM SPAN LENGTHS[a, b, g] (feet – inches)~~

~~SPECIES[c]~~	~~SIZE[d]~~	~~DECK JOIST SPAN LESS THAN OR EQUAL TO: (feet)~~						
		~~6~~	~~8~~	~~10~~	~~12~~	~~14~~	~~16~~	~~18~~
~~Southern pine~~	~~1 – 2 × 6~~	~~4-11~~	~~4-0~~	~~3-7~~	~~3-3~~	~~3-0~~	~~2-10~~	~~2-8~~
	~~1 – 2 × 8~~	~~5-11~~	~~5-1~~	~~4-7~~	~~4-2~~	~~2-10~~	~~3-7~~	~~3-5~~
	~~1 – 2 × 10~~	~~7-0~~	~~6-0~~	~~5-5~~	~~4-11~~	~~4-7~~	~~4-3~~	~~4-0~~
	~~1 – 2 × 12~~	~~8-3~~	~~7-1~~	~~6-4~~	~~5-10~~	~~5-5~~	~~5-0~~	~~4-9~~
	~~2 – 2 × 6~~	~~6-11~~	~~5-11~~	~~5-4~~	~~4-10~~	~~4-6~~	~~4-3~~	~~4-0~~
	~~2 – 2 × 8~~	~~8-9~~	~~7-7~~	~~6-9~~	~~6-2~~	~~5-9~~	~~5-4~~	~~5-0~~
	~~2 – 2 × 10~~	~~10-4~~	~~9-0~~	~~8-0~~	~~7-4~~	~~6-9~~	~~6-4~~	~~6-0~~
	~~2 – 2 × 12~~	~~12-2~~	~~10-7~~	~~9-5~~	~~8-7~~	~~8-0~~	~~7-6~~	~~7-0~~
	~~3 – 2 × 6~~	~~8-2~~	~~7-5~~	~~6-8~~	~~6-1~~	~~5-8~~	~~5-3~~	~~5-0~~
	~~3 – 2 × 8~~	~~10-10~~	~~9-6~~	~~8-6~~	~~7-9~~	~~7-2~~	~~6-8~~	~~6-4~~
	~~3 – 2 × 10~~	~~13-0~~	~~11-3~~	~~10-0~~	~~9-2~~	~~8-6~~	~~7-11~~	~~7-6~~
	~~3 – 2 × 12~~	~~15-3~~	~~13-3~~	~~11-10~~	~~10-9~~	~~10-0~~	~~9-4~~	~~8-10~~
~~Douglas fir-larch[e], hem-fir[e], spruce-pine-fir[e], redwood, western cedars, ponderosa pine[f], red pine[f]~~	~~3 × 6 or 2 – 2 × 6~~	~~5-5~~	~~4-8~~	~~4-2~~	~~3-10~~	~~3-6~~	~~3-1~~	~~2-9~~
	~~3 × 8 or 2 – 2 × 8~~	~~6-10~~	~~5-11~~	~~5-4~~	~~4-10~~	~~4-6~~	~~4-1~~	~~3-8~~
	~~3 × 10 or 2 – 2 × 10~~	~~8-4~~	~~7-3~~	~~6-6~~	~~5-11~~	~~5-6~~	~~5-1~~	~~4-8~~
	~~3 × 12 or 2 – 2 × 12~~	~~9-8~~	~~8-5~~	~~7-6~~	~~6-10~~	~~6-4~~	~~5-11~~	~~5-7~~
	~~4 × 6~~	~~6-5~~	~~5-6~~	~~4-11~~	~~4-6~~	~~4-2~~	~~3-11~~	~~3-8~~
	~~4 × 8~~	~~8-5~~	~~7-3~~	~~6-6~~	~~5-11~~	~~5-6~~	~~5-2~~	~~4-10~~
	~~4 × 10~~	~~9-11~~	~~8-7~~	~~7-8~~	~~7-0~~	~~6-6~~	~~6-1~~	~~5-8~~
	~~4 × 12~~	~~11-5~~	~~9-11~~	~~8-10~~	~~8-1~~	~~7-6~~	~~7-0~~	~~6-7~~
	~~3 – 2 × 6~~	~~7-4~~	~~6-8~~	~~6-0~~	~~5-6~~	~~5-1~~	~~4-9~~	~~4-6~~
	~~3 – 2 × 8~~	~~9-8~~	~~8-6~~	~~7-7~~	~~6-11~~	~~6-5~~	~~6-0~~	~~5-8~~
	~~3 – 2 × 10~~	~~12-0~~	~~10-5~~	~~9-4~~	~~8-6~~	~~7-10~~	~~7-4~~	~~6-11~~
	~~3 – 2 × 12~~	~~13-11~~	~~12-1~~	~~10-9~~	~~9-10~~	~~9-1~~	~~8-6~~	~~8-1~~

~~For SI: 1 inch = 25.4 mm, 1 foot = 304.8 mm, 1 pound per square foot = 0.0479 kPa, 1 pound = 0.454 kg.~~

~~a. Ground snow load, live load = 40 psf, dead load = 10 psf, L/D = 360 at main span, L/D = 180 at cantilever with a 220-pound point load applied at the end.~~

~~b. Beams supporting deck joists from one side only.~~

~~c. No. 2 grade, wet service factor.~~

~~d. Beam depth shall be greater than or equal to depth of joists with a flush beam condition.~~

~~e. Includes incising factor.~~

~~f. Northern species. Incising factor not included.~~

~~g. Beam cantilevers are limited to the adjacent beam's span divided by 4.~~))

DRAFT

[W] TABLE R507.5
MAXIMUM DECK BEAM SPAN – 60 PSF LIVE LOAD or 70 PSF GROUND SNOW LOAD[c]

BEAM SPECIES[d]	BEAM SIZE[e]	MAXIMUM BEAM SPAN[a,b,f] (feet-inches)						
		Deck Joist Span[a,i] (feet)						
		6	8	10	12	14	16	18
Douglas fir-larch[g], Hem-fir[g], Spruce-pine-fir[g]	1-2x6	3-5	2-10	2-5	2-2	2-0	1-10	1-9
	1-2x8	4-7	3-8	3-2	2-10	2-7	2-5	2-4
	1-2x10	5-8	4-9	4-1	3-8	3-4	3-1	2-11
	1-2x12	6-7	5-8	5-0	4-6	4-1	3-10	3-7
	2-2x6	5-2	4-6	4-0	3-5	3-1	2-10	2-7
	2-2x8	6-11	6-0	5-3	4-7	4-1	3-8	3-5
	2-2x10	8-5	7-4	6-6	5-10	5-2	4-9	4-5
	2-2x12	9-10	8-6	7-7	6-11	6-4	5-9	5-4
	3-2x6	6-6	5-7	5-0	4-7	4-2	3-9	3-5
	3-2x8	8-8	7-6	6-8	6-1	5-6	5-0	4-7
	3-2x10	10-7	9-2	8-2	7-6	6-11	6-4	5-10
	3-2x12	12-4	10-8	9-7	8-9	8-1	7-7	7-1
Redwood[h], Western Cedars[h], Ponderosa Pine[h], Red Pine[h]	1-2x6	3-6	2-11	2-6	2-3	2-0	1-11	1-9
	1-2x8	4-6	3-10	3-3	2-11	2-8	2-6	2-4
	1-2x10	5-6	4-9	4-2	3-9	3-5	3-2	3-0
	1-2x12	6-4	5-6	4-11	4-6	4-2	3-11	3-8
	2-2x6	5-3	4-7	4-1	3-6	3-2	2-11	2-8
	2-2x8	6-8	5-9	5-2	4-8	4-2	3-10	3-6
	2-2x10	8-2	7-1	6-4	5-9	5-4	4-10	4-6
	2-2x12	9-5	8-2	7-4	6-8	6-2	5-9	5-5
	3-2x6	6-4	5-8	5-1	4-8	4-3	3-10	3-6
	3-2x8	8-4	7-3	6-5	5-11	5-5	5-1	4-8
	3-2x10	10-2	8-10	7-11	7-2	6-8	6-3	5-11
	3-2x12	11-10	10-3	9-2	8-4	7-9	7-3	6-10

For SI: 1 inch = 25.4 mm, 1 foot = 304.8 mm, 1 pound per square foot = 0.0479 kPa, 1 pound = 0.454 kg.

a. Interpolation allowed. Extrapolation is not allowed.
b. Beams supporting a single span of joists with or without cantilever.
c. Dead load = 10 psf, L/Δ = 360 at main span, L/Δ = 180 at cantilever. Snow load not assumed to be concurrent with live load.
d. No. 2 grade, wet service factor included.
e. Beam depth shall be equal to or greater than the depth of intersecting joist for a flush beam connection.
f. Beam cantilevers are limited to the adjacent beam's span divided by 4.
g. Includes incising factor.
h. Incising factor not included.
i. Deck joist span as shown in Figure R507.5.

R507.5.1 Deck beam bearing. The ends of beams shall have not less than 1-1/2 inches (38 mm) of bearing on wood or metal and not less than 3 inches (76 mm) of bearing on concrete or masonry for the entire width of the beam. Where multiple-span beams bear on intermediate posts, each ply must have full bearing on the post in accordance with Figures R507.5.1(1) and R507.5.1(2).

DRAFT

R507.5.2 Deck beam connection to supports. Deck beams shall be attached to supports in a manner capable of transferring vertical loads and resisting horizontal displacement. Deck beam connections to wood posts shall be in accordance with Figures R507.5.1(1) and R507.5.1(2). Manufactured post-to-beam connectors shall be sized for the post and beam sizes. Bolts shall have washers under the head and nut.

[W] R507.6 Deck joists. Maximum allowable spans for wood deck joists, as shown in Figure R507.6, shall be in accordance with Table R507.6. The maximum joist spacing shall be limited by the decking materials in accordance with Table R507.7. ((~~The maximum joist cantilever shall be limited to one-fourth of the joist span or the maximum cantilever length specified in Table R507.6, whichever is less.~~))

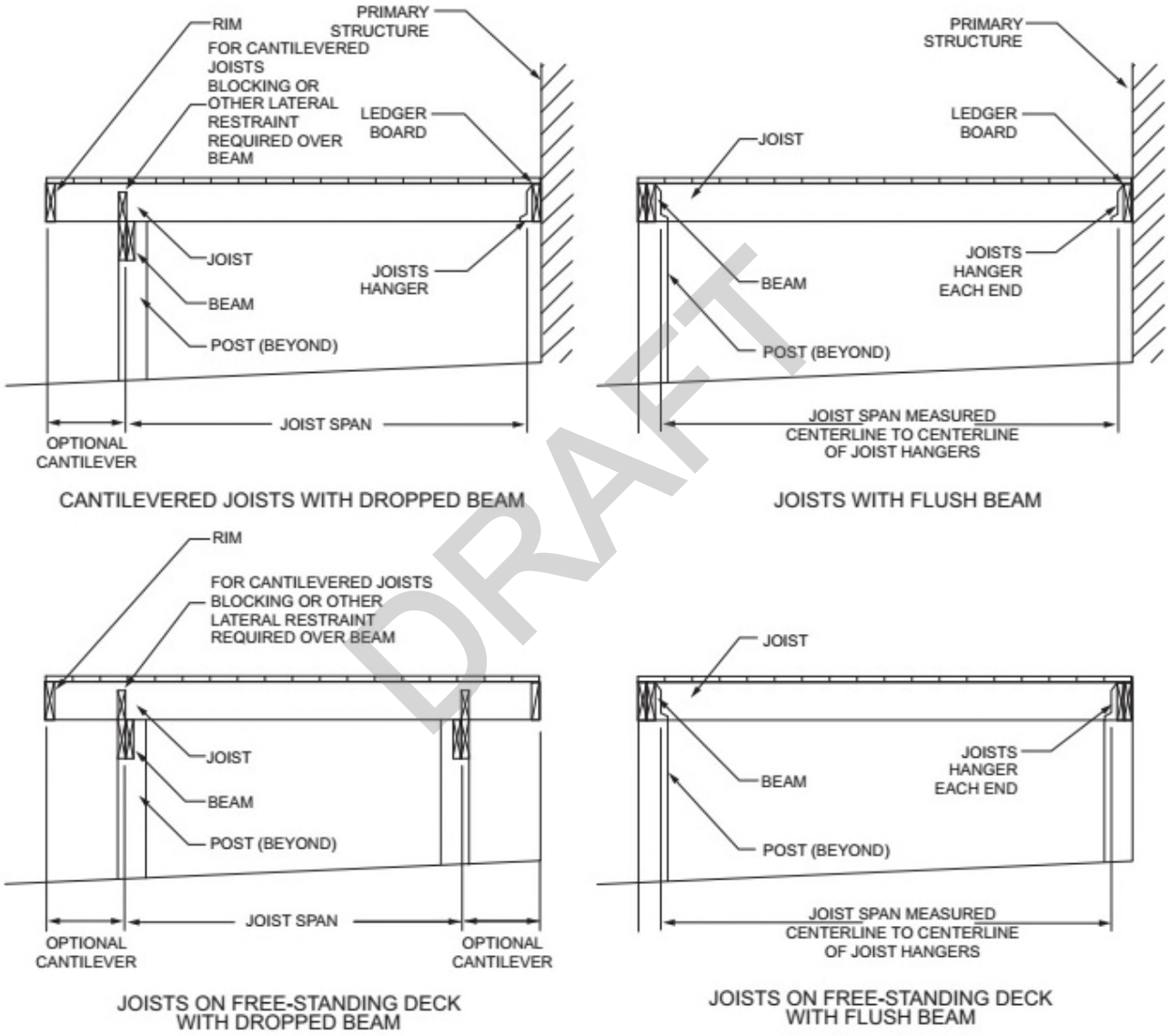

DRAFT

FIGURE R507.6
TYPICAL DECK JOIST SPANS

[W] ((~~TABLE R507.6~~
~~DECK JOIST SPANS FOR COMMON LUMBER SPECIES (ft.–in.)~~

~~SPECIES[a]~~	~~SIZE~~	~~ALLOWABLE JOIST SPAN[b]~~			~~MAXIMUM CANTILEVER[c,d]~~		
		~~SPACING OF DECK JOISTS (inches)~~			~~SPACING OF DECK JOISTS WITH CANTILEVERS[e] (inches)~~		
		~~12~~	~~16~~	~~24~~	~~12~~	~~16~~	~~24~~
~~Southern pine~~	~~2 × 6~~	~~9-11~~	~~9-0~~	~~7-7~~	~~1-3~~	~~1-4~~	~~1-6~~
	~~2 × 8~~	~~13-1~~	~~11-10~~	~~9-8~~	~~2-1~~	~~2-3~~	~~2-5~~
	~~2 × 10~~	~~16-2~~	~~14-0~~	~~11-5~~	~~3-4~~	~~3-6~~	~~2-10~~
	~~2 × 12~~	~~18-0~~	~~16-6~~	~~13-6~~	~~4-6~~	~~4-2~~	~~3-4~~
~~Douglas fir-larch[d], hem-fir[d] spruce-pine-fir[d],~~	~~2 × 6~~	~~9-6~~	~~8-8~~	~~7-2~~	~~1-2~~	~~1-3~~	~~1-5~~
	~~2 × 8~~	~~12-6~~	~~11-1~~	~~9-1~~	~~1-11~~	~~2-1~~	~~2-3~~
	~~2 × 10~~	~~15-8~~	~~13-7~~	~~11-1~~	~~3-1~~	~~3-5~~	~~2-9~~
	~~2 × 12~~	~~18-0~~	~~15-9~~	~~12-10~~	~~4-6~~	~~3-11~~	~~3-3~~
~~Redwood, western cedars, ponderosa pine[e], red pine[e]~~	~~2 × 6~~	~~8-10~~	~~8-0~~	~~7-0~~	~~1-0~~	~~1-1~~	~~1-2~~
	~~2 × 8~~	~~11-8~~	~~10-7~~	~~8-8~~	~~1-8~~	~~1-10~~	~~2-0~~
	~~2 × 10~~	~~14-11~~	~~13-0~~	~~10-7~~	~~2-8~~	~~2-10~~	~~2-8~~
	~~2 × 12~~	~~17-5~~	~~15-1~~	~~12-4~~	~~3-10~~	~~3-9~~	~~3-1~~

~~For SI: 1 inch = 25.4 mm, 1 foot = 304.8 mm, 1 pound per square foot = 0.0479 kPa, 1 pound = 0.454 kg.~~

~~a. No. 2 grade with wet service factor.~~

~~b. Ground snow load, live load = 40 psf, dead load = 10 psf, L/D = 360.~~

~~c. Ground snow load, live load = 40 psf, dead load = 10 psf, L/D = 360 at main span, L/D = 180 at cantilever with a 220-pound point load applied to end.~~

~~d. Includes incising factor.~~

~~e. Northern species with no incising factor.~~

~~f. Cantilevered spans not exceeding the nominal depth of the joist are permitted.~~))

[W] TABLE 507.6
MAXIMUM DECK JOIST SPANS

LOAD[a] (psf)	JOIST SPECIES[b]	JOIST SIZE	ALLOWABLE JOIST SPAN[b,c] (feet-inches)			MAXIMUM CANTILEVER[f,g] (feet-inches)							
			Joist Spacing (inches)			Adjacent Joist Back Span[g] (feet)							
			12	16	24	4	6	8	10	12	14	16	18
60 live load or 70 ground snow load	Douglas fir-larch[e], Hem-fir[e], Spruce-pine-fir[e]	2 × 6	7-11	7-1	5-9	1-0	1-6	NP	NP	NP	NP	NP	NP
		2 × 8	10-5	9-5	7-8	1-0	1-6	2-0	2-1	NP	NP	NP	NP
		2 × 10	13-3	11-6	9-5	1-0	1-6	2-0	2-6	2-8	NP	NP	NP
		2 × 12	15-5	13-4	10-11	1-0	1-6	2-0	2-6	3-0	3-3	NP	NP
	Redwood[f], Western Cedars[f], Ponderosa Pine[f], Red Pine[f]	2 × 6	7-4	6-8	5-10	1-0	1-4	NP	NP	NP	NP	NP	NP
		2 × 8	9-8	8-10	7-4	1-0	1-6	1-11	NP	NP	NP	NP	NP
		2 × 10	12-4	11-0	9-0	1-0	1-6	2-0	2-6	2-6	NP	NP	NP
		2 × 12	14-9	12-9	10-5	1-0	1-6	2-0	2-6	3-0	3-0	NP	NP

For SI: 1 inch = 25.4 mm, 1 foot = 304.8 mm, 1 pound per square foot = 0.0479 kPa, 1 pound = 0.454 kg. NP = Not Permitted

a. Dead load = 10 psf. Snow load not assumed to be concurrent with live load.

b. No. 2 grade, wet service factor included.

c. L/Δ = 360 at main span.

d. L/Δ = 180 at cantilever with 220-pound point load applied to end.

e. Includes incising factor.

f. Incising factor not included.

g. Interpolation permitted. Extrapolation is not permitted.

R507.6.1 Deck joist bearing. The ends of joists shall have not less than 1-1/2 inches (38 mm) of bearing on wood or metal and not less than 3 inches (76 mm) of bearing on concrete or masonry over its entire width. Joists bearing on top of a multiple-ply beam or ledger shall be fastened in accordance with Table R602.3(1). Joists bearing on top of a single-ply beam or ledger shall be attached by a mechanical connector. Joist framing into the side of a beam or ledger board shall be supported by approved joist hangers.

DRAFT

R507.6.2 Deck joist lateral restraint. Joist ends and bearing locations shall be provided with lateral resistance to prevent rotation. Where lateral restraint is provided by joist hangers or blocking between joists, their depth shall equal not less than 60 percent of the joist depth. Where lateral restraint is provided by rim joists, they shall be secured to the end of each joist with not fewer than three 10d (3-inch by 0.128-inch) (76 mm by 3.3 mm) nails or three No. 10x 3-inch (76 mm) long wood screws.

R507.7 Decking. Maximum allowable spacing for joists supporting decking shall be in accordance with Table R507.7. Wood decking shall be attached to each supporting member with not less than two 8d threaded nails or two No. 8 wood screws. Other approved decking or fastener systems shall be installed in accordance with the manufacturer's installation requirements.

TABLE R507.7
MAXIMUM JOIST SPACING FOR DECKING

DECKING MATERIAL TYPE AND NOMINAL SIZE	MAXIMUM ON-CENTER JOIST SPACING	
	Decking perpendicular to joist	Decking diagonal to joist[a]
1-1/4-inch-thick wood	16 inches	12 inches
2-inch-thick wood	24 inches	16 inches
Plastic composite	In accordance with Section R507.2	In accordance with Section R507.2

For SI: 1 inch = 25.4 mm, 1 foot = 304.8 mm, 1 degree = 0.01745 rad.

a. Maximum angle of 45 degrees from perpendicular for wood deck boards.

R507.8 Vertical and lateral supports. Where supported by attachment to an exterior wall, decks shall be positively anchored to the primary structure and designed for both vertical and lateral loads. Such attachment shall not be accomplished by the use of toe-nails or nails subject to withdrawal. For decks with cantilevered framing members, connection to exterior walls or other framing members shall be designed and constructed to resist uplift resulting from the full live load specified in Table R301.5 acting on the cantilevered portion of the deck. Where positive connection to the primary building structure cannot be verified during inspection, decks shall be self-supporting.

R507.9 Vertical and lateral supports at band joist. Vertical and lateral supports for decks shall comply with this section.

R507.9.1 Vertical supports. Vertical loads shall be transferred to band joists with ledgers in accordance with this section.

R507.9.1.1 Ledger details. Deck ledgers shall be a minimum 2-inch by 8-inch (51 mm by 203 mm) nominal, pressure-preservative-treated Southern pine, incised pressure-preservative-treated hem-fir, or approved, naturally durable, No. 2 grade or better lumber. Deck ledgers shall not support concentrated loads from beams or girders. Deck ledgers shall not be supported on stone or masonry veneer.

[W] R507.9.1.2 Band joist details. Band joists supporting a ledger shall be a minimum 2-inch-nominal (51 mm), solid-sawn, spruce-pine-fir or better lumber or a minimum 1-inch (25 mm) ((~~by 9-1/2-inch (25 mm × 241 mm) dimensional, Douglas fir or better, laminated veneer lumber~~)) nominal engineered wood rim boards in accordance with Section R502.1.7. Band joists shall bear fully on the primary structure capable of supporting all required loads.

R507.9.1.3 Ledger to band joist details. Fasteners used in deck ledger connections in accordance with Table R507.9.1.3(1) shall be hot-dipped galvanized or stainless steel and shall be installed in accordance with Table R507.9.1.3(2) and Figures R507.9.1.3(1) and R507.9.1.3(2).

[W] ((~~TABLE R507.9.1.3(1)~~
~~DECK LEDGER CONNECTION TO BAND JOIST[a, b]~~
~~(Deck live load = 40 psf, deck dead load = 10 psf, snow load ≤ 40 psf)~~

~~CONNECTION DETAILS~~	~~JOIST SPAN~~						
	~~6' and less~~	~~6'1" to 8'~~	~~8'1" to 10'~~	~~10'1" to 12'~~	~~12'1" to 14'~~	~~14'1" to 16'~~	~~16'1" to 18'~~
	~~On center spacing of fasteners~~						
~~1/2-inch diameter lag screw with 1/2-inch maximum sheathing[c, d]~~	~~30~~	~~23~~	~~18~~	~~15~~	~~13~~	~~11~~	~~10~~
~~1/2-inch diameter bolt with 1/2-inch maximum sheathing[d]~~	~~36~~	~~36~~	~~34~~	~~29~~	~~24~~	~~21~~	~~19~~
~~1/2-inch diameter bolt with 1-inch maximum sheathing[e]~~	~~36~~	~~36~~	~~29~~	~~24~~	~~21~~	~~18~~	~~16~~

~~For SI: 1 inch = 25.4 mm, 1 foot = 304.8 mm, 1 pound per square foot = 0.0479 kPa.~~

~~a. Ledgers shall be flashed in accordance with Section R703.4 to prevent water from contacting the house band joist.~~

~~b. Snow load shall not be assumed to act concurrently with live load.~~

~~c. The tip of the lag screw shall fully extend beyond the inside face of the band joist.~~

~~d. Sheathing shall be wood structural panel or solid sawn lumber.~~

~~e. Sheathing shall be permitted to be wood structural panel, gypsum board, fiberboard, lumber or foam sheathing. Up to 1/2-inch thickness of stacked washers shall be permitted to substitute for up to 1/2 inch of allowable sheathing thickness where combined with wood structural panel or lumber sheathing.~~))

DRAFT

[W] TABLE R507.9.1.3(1)
DECK LEDGER CONNECTION TO BAND JOIST

LOAD[c] (psf)	JOIST SPAN[a] (feet)	ON-CENTER SPACING OF FASTENERS[b] (inches)		
		1/2-inch diameter lag screw with 1/2-inch maximum sheathing[d, e]	1/2-inch diameter bolt with 1/2-inch maximum sheathing[e]	1/2-inch diameter bolt with 1-inch maximum sheathing[f]
60 live load or 70 ground snow load	6	22	36	35
	8	16	31	26
	10	13	25	21
	12	11	20	17
	14	9	17	15
	16	8	15	13
	18	7	13	11

For SI: 1 inch = 25.4 mm, 1 foot = 304.8 mm, 1 pound per square foot = 0.0479 kPa.

a. Interpolation permitted. Extrapolation is not permitted.
b. Ledgers shall be flashed in accordance with Section R703.4 to prevent water from contacting the house band joist.
c. Dead Load = 10 psf. Snow load shall not be assumed to act concurrently with live load.
d. The tip of the lag screw shall fully extend beyond the inside face of the band joist.
e. Sheathing shall be wood structural panel or solid sawn lumber.
f. Sheathing shall be permitted to be wood structural panel, gypsum board, fiberboard, lumber or foam sheathing. Up to 1/2-inch thickness of stacked washers shall be permitted to substitute for up to 1/2 inch of allowable sheathing thickness where combined with wood structural panel or lumber sheathing.

[W] TABLE R507.9.1.3(2)
PLACEMENT OF LAG SCREWS AND BOLTS IN DECK LEDGERS AND BAND JOISTS

MINIMUM END AND EDGE DISTANCES AND SPACING BETWEEN ROWS				
	TOP EDGE	BOTTOM EDGE	ENDS	ROW SPACING
Ledger[a]	2 inches[d]	3/4 inch	2 inches[b]	1-5/8 inches[b]
Band Joist[c]	3/4 inch	2 inches	2 inches[b]	1-5/8 inches[b]

For SI: 1 inch = 25.4 mm.

a. Lag screws or bolts shall be staggered from the top to the bottom along the horizontal run of the deck ledger in accordance with Figure R507.9.1.3(1).
b. Maximum 5 inches.
c. For engineered rim joists, the manufacturer's recommendations shall govern.
d. The minimum distance from bottom row of lag screws ((~~or bolts~~)) to the top edge of the ledger shall be in accordance with Figure R507.9.1.3(1).
e. The 2 inches may be reduced to 3/4 inch when the band joist is directly supported by a mudsill, a header or by double top wall plates.

For SI: 1 inch = 25.4 mm.

DRAFT

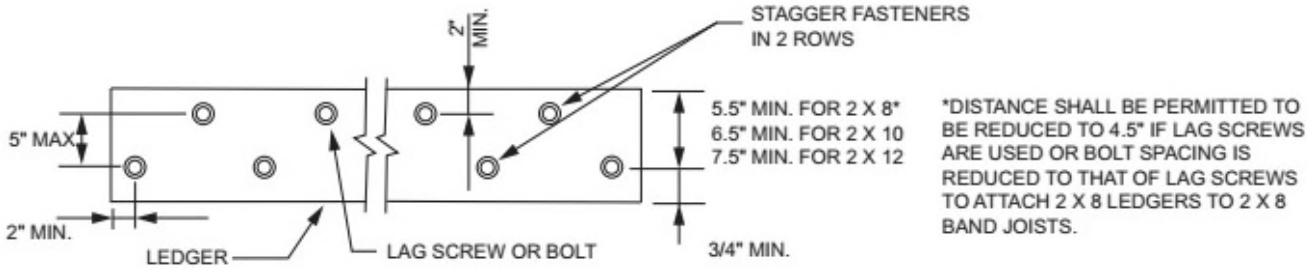

FIGURE R507.9.1.3(1)
PLACEMENT OF LAG SCREWS AND BOLTS IN LEDGERS

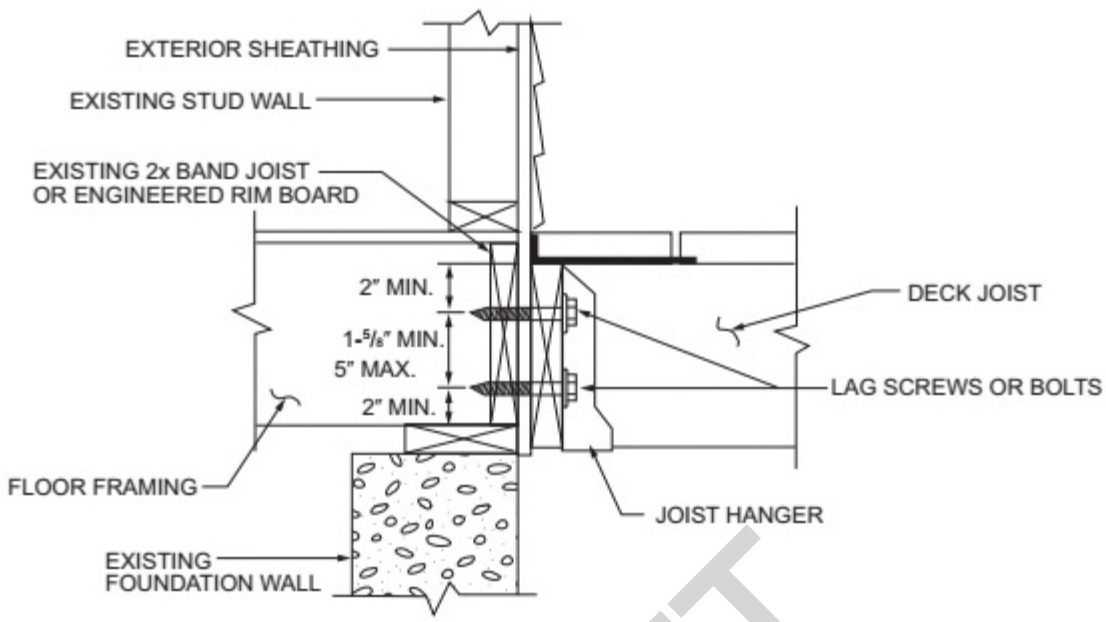

For SI: 1 inch = 25.4 mm.

FIGURE R507.9.1.3(2)
PLACEMENT OF LAG SCREWS AND BOLTS IN BAND JOISTS

R507.9.1.4 Alternate ledger details. Alternate framing configurations supporting a ledger constructed to meet the load requirements of Section R301.5 shall be permitted.

[W] R507.9.2 Lateral connection. Lateral loads shall be transferred to the ground or to a structure capable of transmitting them to the ground. Where the lateral load connection is provided in accordance with Figure R507.9.2(1), hold-down tension devices shall be installed in not less than two locations per deck, within 24 inches (610 mm) of each end of the deck. Each device shall have an allowable stress design capacity of not less than 1,500 pounds (6672 N). Where the lateral load connections are provided in accordance with Figure R507.9.2(2), the hold-down tension devices shall be installed in not less than four locations per deck, and each device shall have an allowable stress design capacity of not less than 750 pounds (3336 N).

Exception: Decks not more than 30 inches above grade at any point may be unattached.

DRAFT

CHAPTER 6

WALL CONSTRUCTION

User note:

About this chapter: *Chapter 6 contains prescriptive provisions for the design and construction of walls. The wall construction covered in Chapter 6 consists of five different types: wood framed, cold-formed steel framed, masonry, concrete and structural insulated panel (SIP). The primary concern of this chapter is the structural integrity of wall construction and transfer of all imposed loads to the supporting structure.*

SECTION R601
GENERAL

R601.1 Application. The provisions of this chapter shall control the design and construction of walls and partitions for buildings.

R601.2 Requirements. Wall construction shall be capable of accommodating all loads imposed in accordance with Section R301 and of transmitting the resulting loads to the supporting structural elements.

R601.2.1 Compressible floor-covering materials. Compressible floor-covering materials that compress more than 1/32 inch (0.8 mm) when subjected to 50 pounds (23 kg) applied over 1 inch square (645 mm) of material and are greater than 1/8 inch (3.2 mm) in thickness in the uncompressed state shall not extend beneath walls, partitions or columns, which are fastened to the floor.

DRAFT

SECTION R602
WOOD WALL FRAMING

R602.1 General. Wood and wood-based products used for load-supporting purposes shall conform to the applicable provisions of this section.

R602.1.1 Sawn lumber. Sawn lumber shall be identified by a grade mark of an accredited lumber grading or inspection agency and have design values certified by an accreditation body that complies with DOC PS 20. In lieu of a grade mark, a certification of inspection issued by a lumber grading or inspection agency meeting the requirements of this section shall be accepted.

[W] R602.1.1.1 Used sawn lumber. Used sawn lumber identified with a grade mark, in good condition and devoid of areas of decay shall be assumed to meet the requirements of Section 602.1.1 or shall comply with the following:

1. Dimensional lumber not identified with a grade mark that has a nominal thickness of 2 inches with a nominal width of 6 inches, or less, shall be assumed to be spruce-pine-fir stud grade and shall have structural properties assigned in accordance with current adopted standards. All other dimensional lumber shall be assumed to be hem-fir No. 2 grade and shall have structural properties assigned in accordance with current adopted standards.

R602.1.2 End-jointed lumber. Approved end-jointed lumber identified by a grade mark conforming to Section R602.1 shall be permitted to be used interchangeably with solid-sawn members of the same species and grade. End-jointed lumber used in an assembly required elsewhere in this code to have a fire-resistance rating shall have the designation “Heat Resistant Adhesive” or “HRA” included in its grade mark.

R602.1.3 Structural glued-laminated timbers. Glued- laminated timbers shall be manufactured and identified as required in ANSI A190.1, ANSI 117 and ASTM D3737.

R602.1.4 Structural log members. Structural log members shall comply with the provisions of ICC 400.

R602.1.5 Structural composite lumber. Structural capacities for structural composite lumber shall be established and monitored in accordance with ASTM D5456.

R602.1.6 Cross-laminated timber. Cross-laminated timber shall be manufactured and identified as required by ANSI/APA PRG 320.

R602.1.7 Engineered wood rim board. Engineered wood rim boards shall conform to ANSI/APA PRR 410 or shall be evaluated in accordance with ASTM D7672. Structural capacities shall be in accordance with either ANSI/APA PRR 410 or established in accordance with ASTM D7672. Rim boards conforming to ANSI/APA PRR 410 shall be marked in accordance with that standard.

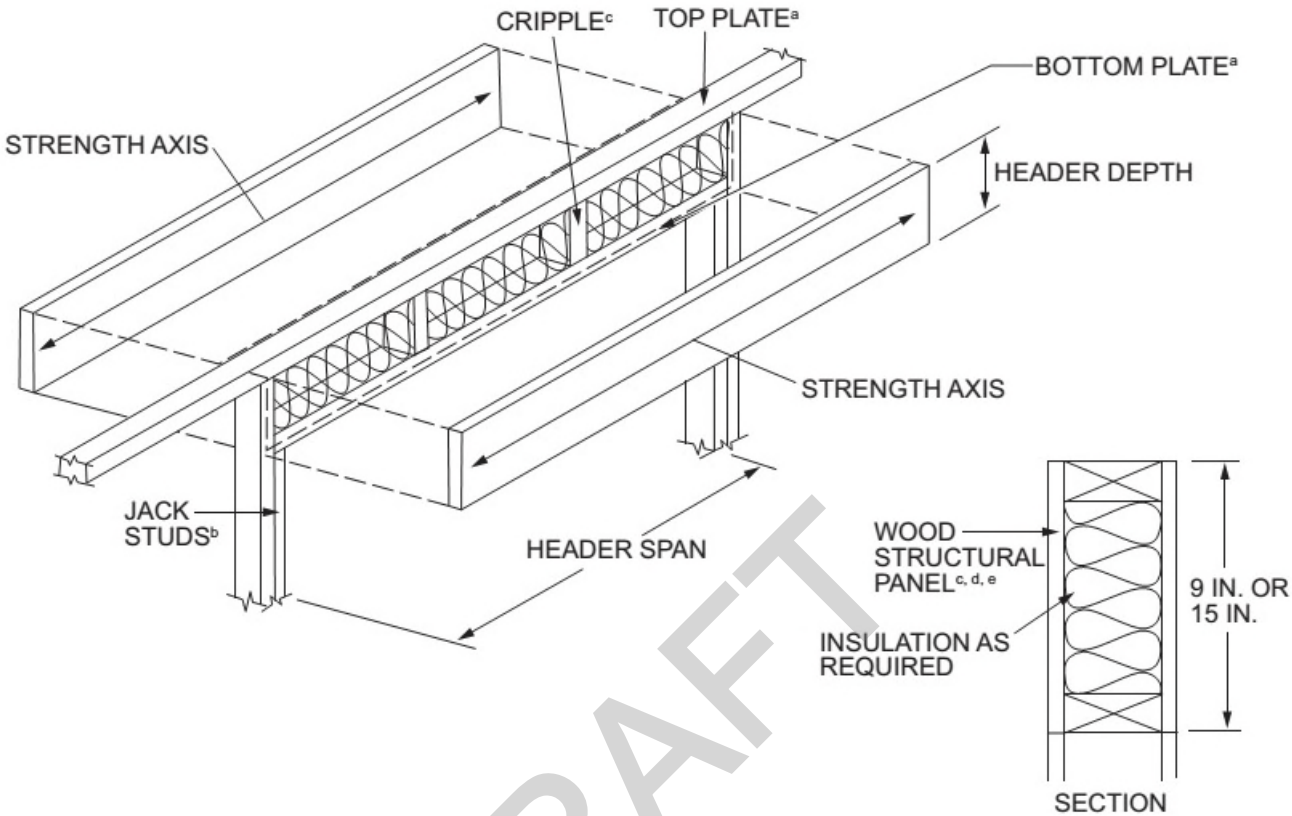

For SI: 1 inch = 25.4 mm, 1 foot = 304.8 mm.

NOTES:

a. The top and bottom plates shall be continuous at header location.

b. Jack studs shall be used for spans over 4 feet.

c. Cripple spacing shall be the same as for studs.

d. Wood structural panel faces shall be single pieces of 15/32-inch-thick Exposure 1 (exterior glue) or thicker, installed on the interior or exterior or both sides of the header.

e. Wood structural panel faces shall be nailed to framing and cripples with 8d common or galvanized box nails spaced 3 inches on center, staggering alternate nails 1/2 inch. Galvanized nails shall be hot-dipped or tumbled.

FIGURE R602.7.3
TYPICAL WOOD STRUCTURAL PANEL BOX HEADER CONSTRUCTION

R602.7.4 Nonbearing walls. Load-bearing headers are not required in interior or exterior nonbearing walls. A single flat 2-inch by 4-inch (51 mm by 102 mm) member shall be permitted to be used as a header in interior or exterior nonbearing walls for openings up to 8 feet (2438 mm) in width if the vertical distance to the parallel nailing surface above is not more than 24 inches (610 mm). For such nonbearing headers, cripples or blocking are not required above the header.

[W] ((~~R602.7.5 Supports for headers.~~ ~~Headers shall be supported on each end with one or more jack studs or with approved framing anchors in accordance with Table R602.7(1) or R602.7(2). The full-height stud adjacent to each end of the header shall be end nailed to each end of the header with four 16d nails (3.5 inches × 0.135 inches). The minimum number of full-height studs at each end of a header shall be in accordance with Table R602.7.5.~~))

DRAFT

[W] ((~~TABLE R602.7.5~~
~~MINIMUM NUMBER OF FULL-HEIGHT STUDS~~
~~AT EACH END OF HEADERS IN EXTERIOR WALLS~~~~a~~

~~MAXIMUM HEADER SPAN (feet)~~	~~ULTIMATE DESIGN WIND SPEED AND EXPOSURE CATEGORY~~	
	~~< 140 mph, Exposure B or < 130 mph, Exposure C~~	~~≤ 115 mph, Exposure B~~~~b~~
~~4~~	~~1~~	~~1~~
~~6~~	~~2~~	~~1~~
~~8~~	~~2~~	~~1~~
~~10~~	~~3~~	~~2~~
~~12~~	~~3~~	~~2~~
~~14~~	~~3~~	~~2~~
~~16~~	~~4~~	~~2~~
~~18~~	~~4~~	~~2~~

~~For SI: 1 foot = 304.8 mm, 1 mile per hour = 0.447 m/s.~~

~~a. For header spans between those given, use the minimum number of full-height studs associated with the larger header span.~~

~~b. The tabulated minimum number of full-height studs is applicable where jack studs are provided to support the header at each end in accordance with Table R602.7(1). Where a framing anchor is used to support the header in lieu of a jack stud in accordance with Note d of Table R602.7(1), the minimum number of full-height studs at each end of a header shall be in accordance with requirements for wind speed < 140 mph, Exposure B.~~))

R602.8 Fireblocking required. Fireblocking shall be provided in accordance with Section R302.11.

[W] R602.9 Cripple walls. Foundation cripple walls shall be framed of studs not smaller than the studding above. Where exceeding 4 feet (1219 mm) in height, such walls shall be framed of studs having the size required for an additional *story*.

Cripple walls supporting bearing walls or exterior walls or interior braced wall panels as required in Sections R403.1.2 and R602.10.9.1 with a stud height less than 14 inches (356 mm) shall be continuously sheathed on one side with wood structural panels fastened to both the top and bottom plates in accordance with Table R602.3(1), or the cripple walls shall be constructed of solid blocking.

((~~Cripple~~)) All cripple walls shall be supported on continuous foundations.

Exception: Footings supporting *cripple walls* used to support interior *braced wall panels* as required in Sections R403.1.2 and R602.10.9.1 shall be continuous for the required length of the *cripple wall* and constructed beyond the *cripple wall* for a minimum distance of 4 inches and a maximum distance of the footing thickness. The footings extension is not required at intersections with other footings.

R602.10 Wall bracing. Buildings shall be braced in accordance with this section or, when applicable, Section R602.12. Where a building, or portion thereof, does not comply with one or more of the bracing requirements in this section, those portions shall be designed and constructed in accordance with Section R301.1.

R602.10.1 Braced wall lines. For the purpose of determining the amount and location of bracing required in each story level of a building, *braced wall lines* shall be designated as straight lines in the building plan placed in accordance with this section.

R602.10.1.1 Length of a braced wall line. The length of a *braced wall line* shall be the distance between its ends. The end of a *braced wall line* shall be the intersection with a perpendicular *braced wall line*, an angled *braced wall line* as permitted in Section R602.10.1.4 or an exterior wall as shown in Figure R602.10.1.1.

DRAFT

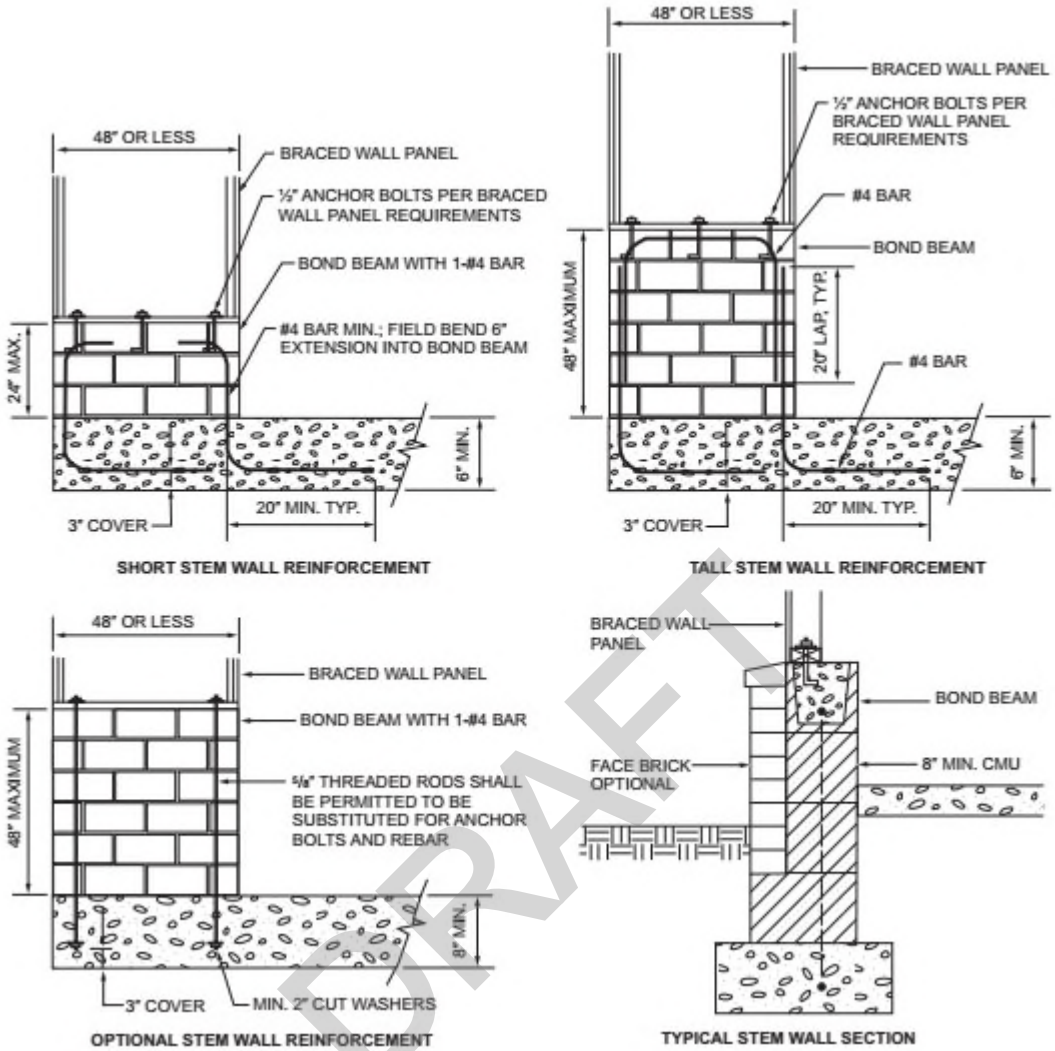

DRAFT

For SI: 1 inch = 25.4 mm.

FIGURE R602.10.9
MASONRY STEM WALLS SUPPORTING BRACED WALL PANELS

R602.10.9.1 Braced wall panel support for Seismic Design Categories D_0, D_1 and D_2. In Seismic Design Categories D_0, D_1 and D_2, braced wall panel footings shall be as specified in Section R403.1.2.

[W] R602.10.10 Cripple wall bracing. Cripple walls shall be constructed in accordance with Section R602.9 and braced in accordance with this section. Cripple walls supporting bearing walls or *exterior walls* or interior *braced wall panels* as required in Section R403.1.2 shall be braced with the length and method of bracing used for the wall above in accordance with Tables R602.10.3(1) and R602.10.3(3), and the applicable adjustment factors in Table R602.10.3(2) or R602.10.3(4), respectively, except that the length of cripple wall bracing shall be multiplied by a factor of 1.15. Where gypsum wall board is not used on the inside of the cripple wall bracing, the length adjustments for the elimination of the gypsum wallboard, or equivalent, shall be applied as directed in Tables R602.10.3(2) and R602.10.3(4) to the length of cripple wall bracing required. This adjustment shall be taken in addition to the 1.15 increase.

R602.10.10.1 Cripple wall bracing for Seismic Design Categories D_0 and D_1 and townhouses in Seismic Design Category C. In addition to the requirements in Section R602.10.10, the distance between adjacent edges of *braced wall panel*s for cripple walls along a *braced wall line* shall be 14 feet (4267 mm) maximum.

Where *braced wall lines* at interior walls are not supported on a continuous foundation below, the adjacent parallel cripple walls, where provided, shall be braced with Method WSP or Method CS-WSP in accordance with Section R602.10.4. The length of bracing required in accordance with Table R602.10.3(3) for the cripple walls shall be multiplied by 1.5. Where the cripple walls do not have sufficient length to provide the required bracing, the spacing of panel edge fas-

R607.5.2.2 Channel-type restraints. Glass unit masonry panels shall be recessed not less than 1 inch (25 mm) within channels and chases. Channel-type restraints shall be oversized to accommodate expansion material in the opening, packing and sealant between the framing restraints, and the glass unit masonry perimeter units.

R607.6 Sills. Before the bedding of glass units, the sill area shall be covered with a water-base asphaltic emulsion coating. The coating shall be not less than 1/8 inch (3 mm) thick.

R607.7 Expansion joints. Glass unit masonry panels shall be provided with expansion joints along the top and sides at all structural supports. Expansion joints shall be not less than 3/8 inch (10 mm) in thickness and shall have sufficient thickness to accommodate displacements of the supporting structure. Expansion joints shall be entirely free of mortar and other debris and shall be filled with resilient material.

R607.8 Mortar. Glass unit masonry shall be laid with Type S or N mortar. Mortar shall not be retempered after initial set. Mortar unused within 1-1/2 hours after initial mixing shall be discarded.

R607.9 Reinforcement. Glass unit masonry panels shall have horizontal joint reinforcement spaced not greater than 16 inches (406 mm) on center located in the mortar bed joint. Horizontal joint reinforcement shall extend the entire length of the panel but shall not extend across expansion joints. Longitudinal wires shall be lapped not less than 6 inches (152 mm) at splices. Joint reinforcement shall be placed in the bed joint immediately below and above openings in the panel. The reinforcement shall have not less than two parallel longitudinal wires of size W1.7 or greater, and have welded cross wires of size W1.7 or greater.

R607.10 Placement. Glass units shall be placed so head and bed joints are filled solidly. Mortar shall not be furrowed. Head and bed joints of glass unit masonry shall be 1/4 inch (6.4 mm) thick, except that vertical joint thickness of radial panels shall be not less than 1/8 inch (3 mm) or greater than 5/8 inch (16 mm). The bed joint thickness tolerance shall be minus 1/16 inch (1.6 mm) and plus 1/8 inch (3 mm). The head joint thickness tolerance shall be plus or minus 1/8 inch (3 mm).

DRAFT

SECTION R608
EXTERIOR CONCRETE WALL CONSTRUCTION

[W] R608.1 General. Exterior concrete walls shall be designed and constructed in accordance with the provisions of this section or in accordance with the provisions of PCA 100, ((~~or~~)) ACI 318, or ACI 332. Where PCA 100, ACI 318 or ACI 332, or the provisions of this section are used to design concrete walls, project drawings, typical details and specifications are not required to bear the seal of the architect or engineer responsible for design, unless otherwise required by the state law of the jurisdiction having authority.

R608.1.1 Interior construction. These provisions are based on the assumption that interior walls and partitions, both load-bearing and nonload-bearing, floors and roof/ceiling assemblies are constructed of *light-framed construction* complying with the limitations of this code and the additional limitations of Section R608.2. Design and construction of light-framed assemblies shall be in accordance with the applicable provisions of this code. Where second-story exterior walls are of *light-framed construction*, they shall be designed and constructed as required by this code.

Aspects of concrete construction not specifically addressed by this code, including interior concrete walls, shall comply with ACI 318.

R608.1.2 Other concrete walls. Exterior concrete walls constructed in accordance with this code shall comply with the shapes and minimum concrete cross-sectional dimensions of Table R608.3. Other types of forming systems resulting in concrete walls not in compliance with this section shall be designed in accordance with ACI 318.

R608.2 Applicability limits. The provisions of this section shall apply to the construction of exterior concrete walls for buildings not greater than 60 feet (18 288 mm) in plan dimensions, floors with clear spans not greater than 32 feet (9754 mm) and roofs with clear spans not greater than 40 feet (12 192 mm). Buildings shall not exceed 35 feet (10 668 mm) in mean roof height or two stories in height above grade. Floor/ceiling dead loads shall not exceed 10 pounds per square foot (479 Pa), roof/ceiling dead loads shall not exceed 15 pounds per square foot (718 Pa) and *attic* live loads shall not exceed 20 pounds per square foot (958 Pa). Roof overhangs shall not exceed 2 feet (610 mm) of horizontal projection beyond the exterior wall and the dead load of the overhangs shall not exceed 8 pounds per square foot (383 Pa).

Walls constructed in accordance with the provisions of this section shall be limited to buildings subjected to a maximum design wind speed of 160 mph (72 m/s) Exposure B, 136 mph (61 m/s) Exposure C and 125 mph (56 m/s) Exposure D. Walls constructed in accordance with the provisions of this section shall be limited to detached one- and two-family *dwellings* and townhouses assigned to Seismic Design Category A or B, and detached one- and two-family *dwellings* assigned to Seismic Design Category C.

Buildings that are not within the scope of this section shall be designed in accordance with PCA 100 or ACI 318.

R608.3 Concrete wall systems. Concrete walls constructed in accordance with these provisions shall comply with the shapes and minimum concrete cross-sectional dimensions of Table R608.3.

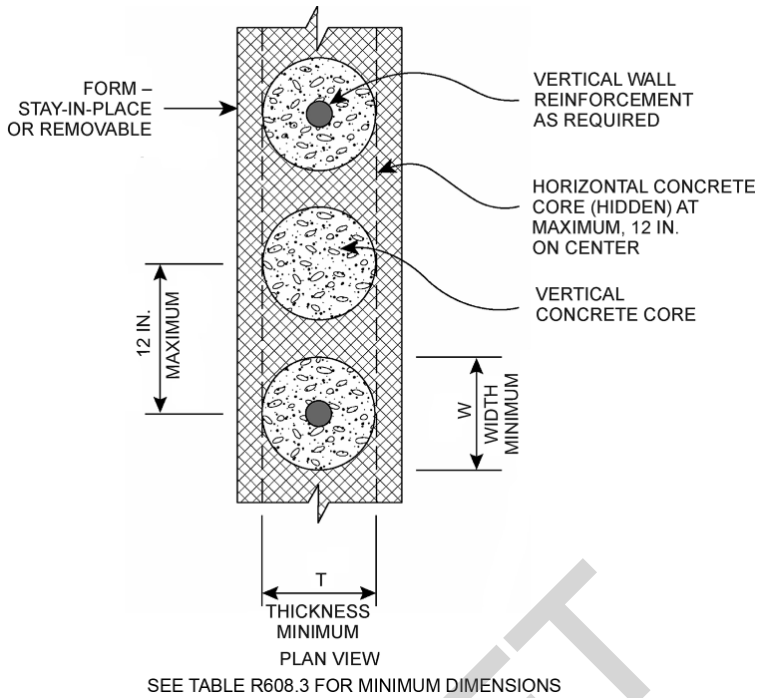

For SI: 1 inch = 25.4 mm.

FIGURE R608.3(3)
SCREEN-GRID WALL SYSTEM

DRAFT

R608.4 Stay-in-place forms. Stay-in-place concrete forms shall comply with this section.

R608.4.1 Surface burning characteristics. The flame spread index and smoke-developed index of forming material, other than foam plastic, left exposed on the interior shall comply with Section R302.9. The surface burning characteristics of foam plastic used in insulating concrete forms shall comply with Section R316.3.

R608.4.2 Interior covering. Stay-in-place forms constructed of rigid foam plastic shall be protected on the interior of the building as required by Sections R316.4 and R702.3.4. Where gypsum board is used to protect the foam plastic, it shall be installed with a mechanical fastening system. Use of adhesives is permitted in addition to mechanical fasteners.

R608.4.3 Exterior wall covering. Stay-in-place forms constructed of rigid foam plastics shall be protected from sunlight and physical damage by the application of an *approved* exterior wall covering complying with this code. Exterior surfaces of other stay-in-place forming systems shall be protected in accordance with this code.

Requirements for installation of masonry veneer, stucco and other finishes on the exterior of concrete walls and other construction details not covered in this section shall comply with the requirements of this code.

R608.4.4 Flat ICF wall systems. Flat ICF wall system forms shall conform to ASTM E2634.

R608.5 Materials. Materials used in the construction of concrete walls shall comply with this section.

[W] R608.5.1 Concrete and materials for concrete. Materials used in concrete, and the concrete itself, shall conform to requirements of this section, PCA 100, ((~~or~~)) ACI 318, or ACI 332.

R608.5.1.1 Cements. The following standards as referenced in Chapter 44 shall be permitted to be used.

1. ASTM C150
2. ASTM C595
3. ASTM C1157

R608.5.1.2 Concrete mixing and delivery. Mixing and delivery of concrete shall comply with ASTM C94 or ASTM C685.

R608.5.1.3 Maximum aggregate size. The nominal maximum size of coarse aggregate shall not exceed one-fifth the narrowest distance between sides of forms, or three-fourths the clear spacing between reinforcing bars or between a bar and the side of the form.

1. For ceiling and roof systems of wood-framed construction, the provisions of Section R608.9.1 and the prescriptive details of Figures R608.9(9) and R608.9(10), where permitted by the tables accompanying those figures. Portions of connections of wood-framed ceiling and roof systems not noted in the figures shall be in accordance with Section R802, or AWC WFCM, if applicable. Wood framing members shall be of a species having a specific gravity equal to or greater than 0.42.
2. For ceiling and roof systems of cold-formed steel construction, the provisions of Section R608.9.1 and the prescriptive details of Figures R608.9(11) and R608.9(12), where permitted by the tables accompanying those figures. Portions of connections of cold-formed-steel framed ceiling and roof systems not noted in the figures shall be in accordance with Section R804, or AISI S230, if applicable.
3. Proprietary connectors selected to resist loads and load combinations in accordance with Appendix A (ASD) or Appendix B (LRFD) of PCA 100.
4. An engineered design using loads and load combinations in accordance with Appendix A (ASD) or Appendix B (LRFD) of PCA 100.
5. An engineered design using loads and material design provisions in accordance with this code, or in accordance with ASCE 7, ACI 318, and AWC NDS for wood-framed construction or AISI S100 for cold-formed steel-framed construction.

R608.10 Floor, roof and ceiling diaphragms. Floors and roofs in buildings with exterior walls of concrete shall be designed and constructed as diaphragms. Where gable-end walls occur, ceilings shall be designed and constructed as diaphragms. The design and construction of floors, roofs and ceilings of wood framing or cold-formed-steel framing serving as diaphragms shall comply with the applicable requirements of this code, or AWC WFCM or AISI S230, if applicable. Wood framing members shall be of a species having a specific gravity equal to or greater than 0.42.

DRAFT

SECTION R609
EXTERIOR WINDOWS AND DOORS

R609.1 General. This section prescribes performance and construction requirements for exterior windows and doors installed in walls. Windows and doors shall be installed and flashed in accordance with the fenestration manufacturer's written instructions. Window and door openings shall be flashed in accordance with Section R703.4. Written installation instructions shall be provided by the fenestration manufacturer for each window or door.

R609.2 Performance. Exterior windows and doors shall be capable of resisting the design wind loads specified in Table R301.2(2) adjusted for height and exposure in accordance with Table R301.2(3) or determined in accordance with ASCE 7 using the allowable stress design load combinations of ASCE 7. For exterior windows and doors tested in accordance with Sections R609.3 and R609.5, required design wind pressures determined from ASCE 7 using the ultimate strength design (USD) are permitted to be multiplied by 0.6. Design wind loads for exterior glazing not part of a labeled assembly shall be permitted to be determined in accordance with Chapter 24 of the *International Building Code*. Design wind loads for exterior glazing not part of a labeled assembly shall be permitted to be determined in accordance with Chapter 24 of the *International Building Code*.

[W] R609.3 Testing and labeling. Exterior windows and sliding doors shall be tested by an *approved* independent laboratory, and bear a *label* identifying manufacturer, performance characteristics and *approved* inspection agency to indicate compliance with AAMA/WDMA/CSA 101/I.S.2/A440. Exterior side-hinged doors shall be tested and *labeled* as conforming to AAMA/WDMA/CSA 101/I.S.2/A440 or AMD 100, or comply with Section R609.5.

Exceptions:

1. Decorative glazed openings.
2. Custom exterior windows and doors manufactured by a small business shall be exempt from all testing requirements in Section R609 provided they meet the applicable provisions of Chapter 24 of the *International Building Code*.

R609.3.1 Comparative analysis. Structural wind load design pressures for window and door units different than the size tested in accordance with Section R609.3 shall be permitted to be different than the design value of the tested unit where determined in accordance with one of the following comparative analysis methods:

1. Structural wind load design pressures for window and door units smaller than the size tested in accordance with Section R609.3 shall be permitted to be higher than the design value of the tested unit provided such higher pressures are determined by accepted engineering analysis. Components of the smaller unit shall be the same as those of the tested unit. Where such calculated design pressures are used, they shall be validated by an additional test of the window or door unit having the highest allowable design pressure.
2. In accordance with WDMA I.S.11.

R609.4 Garage doors. Garage doors shall be tested in accordance with either ASTM E330 or ANSI/DASMA 108, and shall meet the acceptance criteria of ANSI/DASMA 108.

CPA/ANSI A135.5. All structural panel components within the *conditioned space* such as plywood, particle board, wafer board and oriented strand board shall be identified as "EXPOSURE 1" "EXTERIOR" or "HUD-APPROVED."

R702.6 Wood shakes and shingles. Wood shakes and shingles shall conform to CSSB *Grading Rules for Wood Shakes and Shingles* and shall be permitted to be installed directly to the studs with maximum 24 inches (610 mm) on-center spacing.

R702.6.1 Attachment. Nails, staples or glue are permitted for attaching shakes or shingles to the wall, and attachment of the shakes or shingles directly to the surface shall be permitted provided the fasteners are appropriate for the type of wall surface material. Where nails or staples are used, two fasteners shall be provided and shall be placed so that they are covered by the course above.

R702.6.2 Furring strips. Where furring strips are used, they shall be 1 inch by 2 inches or 1 inch by 3 inches (25 mm by 51 mm or 25 mm by 76 mm), spaced a distance on center equal to the desired exposure, and shall be attached to the wall by nailing through other wall material into the studs.

R702.7 Vapor retarders. Class I or II vapor retarders are required on the interior side of frame walls in Climate Zones 5, 6, 7, 8 and Marine 4.

Exceptions:

1. Basement walls.
2. Below-grade portion of any wall.
3. Construction where moisture or its freezing will not damage the materials.

R702.7.1 Class III vapor retarders. Class III vapor retarders shall be permitted where any one of the conditions in Table R702.7.1 is met.

TABLE R702.7.1
CLASS III VAPOR RETARDERS

CLIMATE ZONE	CLASS III VAPOR RETARDERS PERMITTED FOR:[a]
Marine 4	Vented cladding over wood structural panels. Vented cladding over fiberboard. Vented cladding over gypsum. Continuous insulation with *R*-value ≥ 2.5 over 2 × 4 wall. Continuous insulation with *R*-value ≥ 3.75 over 2 × 6 wall.
5	Vented cladding over wood structural panels. Vented cladding over fiberboard. Vented cladding over gypsum. Continuous insulation with *R*-value ≥ 5 over 2 × 4 wall. Continuous insulation with *R*-value ≥ 7.5 over 2 × 6 wall.
6	Vented cladding over fiberboard. Vented cladding over gypsum. Continuous insulation with *R*-value ≥ 7.5 over 2 × 4 wall. Continuous insulation with *R*-value ≥ 11.25 over 2 × 6 wall.
7 and 8	Continuous insulation with *R*-value ≥ 10 over 2 × 4 wall. Continuous insulation with *R*-value ≥ 15 over 2 × 6 wall.

For SI: 1 pound per cubic foot = 16 kg/m^3.

a. Spray foam with a maximum permeance of 1.5 perms at the installed thickness, applied to the interior cavity side of wood structural panels, fiberboard, insulating sheathing or gypsum is deemed to meet the continuous insulation requirement where the spray foam *R*-value meets or exceeds the specified continuous insulation *R*-value.

R702.7.2 Material vapor retarder class. The *vapor retarder class* shall be based on the manufacturer's certified testing or a tested assembly.

The following shall be deemed to meet the class specified:

1. Class I: Sheet polyethylene, on perforated aluminum foil.
2. Class II: Kraft-faced fiberglass batts.
3. Class III: Latex or enamel paint.

R702.7.3 Minimum clear airspaces and vented openings for vented cladding. For the purposes of this section, vented cladding shall include the following minimum clear airspaces. Other openings with the equivalent vent area shall be permitted.

DRAFT

1. Vinyl polypropylene or horizontal aluminum siding applied over a weather-resistive barrier as specified in Table R703.3(1).
2. Brick veneer with a clear airspace as specified in Table R703.8.4.
3. Other approved vented claddings.

SECTION R703
EXTERIOR COVERING

R703.1 General. Exterior walls shall provide the building with a weather-resistant exterior wall envelope. The exterior wall envelope shall include flashing as described in Section R703.4.

Exception: Log walls designed and constructed in accordance with the provisions of ICC 400.

[W] R703.1.1 Water resistance. The exterior wall envelope shall be designed and constructed in a manner that prevents the accumulation of water within the wall assembly by providing a water-resistant barrier behind the exterior cladding as required by Section R703.2 and a means of draining ((~~to the exterior~~)) water that penetrates the exterior cladding to the exterior. Protection against condensation in the *exterior wall* assembly shall be provided in accordance with Section R702.7 of this code.

Exceptions:

1. A weather-resistant exterior wall envelope shall not be required over concrete or masonry walls designed in accordance with Chapter 6 and flashed in accordance with Section R703.4 or R703.8.
2. Compliance with the requirements for a means of drainage, and the requirements of Sections R703.2 and R703.4, shall not be required for an exterior wall envelope that has been demonstrated to resist wind-driven rain through testing of the exterior wall envelope, including joints, penetrations and intersections with dissimilar materials, in accordance with ASTM E331 under the following conditions:
   - 2.1. Exterior wall envelope test assemblies shall include at least one opening, one control joint, one wall/eave interface and one wall sill. All tested openings and penetrations shall be representative of the intended end-use configuration.
   - 2.2. Exterior wall envelope test assemblies shall be at least 4 feet by 8 feet (1219 mm by 2438 mm) in size.
   - 2.3. Exterior wall assemblies shall be tested at a minimum differential pressure of 6.24 pounds per square foot (299 Pa).
   - 2.4. Exterior wall envelope assemblies shall be subjected to the minimum test exposure for a minimum of 2 hours.

   The exterior wall envelope design shall be considered to resist wind-driven rain where the results of testing indicate that water did not penetrate control joints in the exterior wall envelope, joints at the perimeter of openings penetration or intersections of terminations with dissimilar materials.
3. The requirement for a means of drainage shall not be construed to mean an air space cavity under the exterior cladding for an *exterior wall* clad with panel or lapped siding made of plywood, engineered wood, hardboard, or fiber cement. A water-resistive barrier as required by Section R703.2 will be required on *exterior walls.*

Interpretation R703.1.1: According to Section R703.1 exception 3, a rain-screen or similar construction method is not required for most exterior siding and cladding, and single-wall construction is allowed. Drainage methods are required to conform to the manufacturer's installation instructions and other sections of the *International Residential Code.*

Note: The "water-resistive barrier" behind the *exterior wall* covering provides drainage of the water that may enter an *exterior wall* envelope. If water penetrates the *exterior wall* covering, the felt paper or other *approved* material will direct the water to the bottom of the wall where it will escape to the exterior.

R703.1.2 Wind resistance. Wall coverings, backing materials and their attachments shall be capable of resisting wind loads in accordance with Tables R301.2(2) and R301.2(3). Wind-pressure resistance of the siding, soffit and backing materials shall be determined by ASTM E330 or other applicable standard test methods. Where wind-pressure resistance is determined by design analysis, data from approved design standards and analysis conforming to generally accepted engineering practice shall be used to evaluate the siding, soffit and backing material and its fastening. All applicable failure modes including bending rupture of siding, fastener withdrawal and fastener head pull-through shall be considered in the testing or design analysis. Where the wall covering, soffit and backing material resist wind load as an assembly, use of the design capacity of the assembly shall be permitted.

((~~**R703.2 Water-resistive barrier.** One layer of No. 15 asphalt felt, free from holes and breaks, complying with ASTM D226 for Type 1 felt or other approved water-resistive barrier shall be applied over studs or sheathing of all exterior walls. No.15 asphalt felt shall be applied horizontally, with the upper layer lapped over the lower layer not less than 2 inches (51 mm). Where~~

DRAFT

~~joints occur, felt shall be lapped not less than 6 inches (152 mm). Other *approved* materials shall be installed in accordance with the *water-resistive barrier* manufacturer's installation instructions. The No. 15 asphalt felt or other approved *water-resistive barrier* material shall be continuous to the top of walls and terminated at penetrations and building appendages in a manner to meet the requirements of the exterior wall envelope as described in Section R703.1.~~))

[W] R703.2 Water-resistive barrier. Not fewer than one layer of water-resistive barrier shall be applied over studs or sheathing with flashing as indicated in Section R703.4, in such a manner as to provide a continuous water resistive barrier behind the exterior wall veneer. Water-resistive barrier materials shall comply with one of the following:

1. No. 15 felt complying with ASTM D226, Type 1.
2. ASTM E2556, Type 1 or 2.
3. ASTM E331 in accordance with Section R703.1.1; or
4. Other approved materials in accordance with the manufacturer's installation instructions.

R703.3 Wall covering nominal thickness and attachments. The nominal thickness and attachment of exterior wall coverings shall be in accordance with Table R703.3(1), the wall covering material requirements of this section, and the wall covering manufacturer's installation instructions. Cladding attachment over foam sheathing shall comply with the additional requirements and limitations of Sections R703.15 through R703.17. Nominal material thicknesses in Table R703.3(1) are based on a maximum stud spacing of 16 inches (406 mm) on center. Where specified by the siding manufacturer's instructions and supported by a test report or other documentation, attachment to studs with greater spacing is permitted. Fasteners for exterior wall coverings attached to wood framing shall be in accordance with Section R703.3.3 and Table R703.3(1). Exterior wall coverings shall be attached to cold-formed steel light frame construction in accordance with the cladding manufacturer's installation instructions, the requirements of Table R703.3(1) using screw fasteners substituted for the nails specified in accordance with Table R703.3(2), or an approved design.

DRAFT

1. Fasteners for horizontal aluminum siding, steel siding, particleboard panel siding, wood structural panel siding in accordance with ANSI/APA-PRP 210, fiber-cement panel siding and fiber-cement lap siding installed over foam plastic sheathing shall penetrate not less than 1-1/2 inches (38 mm) into framing or shall be in accordance with the manufacturer's installation instructions.
2. Fasteners for hardboard panel and lap siding shall penetrate not less than 1-1/2 inches (38 mm) into framing.
3. Fasteners for vinyl siding and insulated vinyl siding installed over wood or wood structural panel sheathing shall penetrate not less than 1-1/4 inches (32 mm) into sheathing and framing combined. Vinyl siding and insulated vinyl siding shall be permitted to be installed with fasteners penetrating into or through wood or wood structural sheathing of minimum thickness as specified by the manufacturer's instructions or test report, with or without penetration into the framing. Where the fastener penetrates fully through the sheathing, the end of the fastener shall extend not less than 1/4 inch (6.4 mm) beyond the opposite face of the sheathing. Fasteners for vinyl siding and insulated vinyl siding installed over foam plastic sheathing shall be in accordance with Section R703.11.2. Fasteners for vinyl siding and insulated vinyl siding installed over fiberboard or gypsum sheathing shall penetrate not less than 1-1/4 inches (32 mm) into framing.
4. Fasteners for vertical or horizontal wood siding shall penetrate not less than 1-1/2 inches (38 mm) into studs, studs and wood sheathing combined, or blocking.
5. Fasteners for siding material installed over foam plastic sheathing shall have sufficient length to accommodate foam plastic sheathing thickness and to penetrate framing or sheathing and framing combined, as specified in Items 1 through 4.

[W] R703.4 Flashing. Approved corrosion-resistant flashing shall be applied shingle-fashion in a manner to prevent entry of water into the wall cavity or penetration of water to the building structural framing components. Self-adhered membranes used as flashing shall comply with AAMA 711. Fluid-applied membranes used as flashing in exterior walls shall comply with AAMA 714. The flashing shall extend to the surface of the exterior wall finish. Approved corrosion-resistant flashings shall be installed at the following locations:

1. Exterior window and door openings. Flashing at exterior window and door openings shall extend to the surface of the exterior wall finish or to the water-resistive barrier complying with Section 703.2 for subsequent drainage. Mechanically attached flexible flashings shall comply with AAMA 712. ((~~Flashing at exterior window and door openings shall be installed in accordance with one or more of the following:~~

   ~~1.1. The fenestration manufacturer's installation and flashing instructions, or for applications not addressed in the fenestration manufacturer's instructions, in accordance with the flashing manufacturer's instructions. Where flashing instructions or details are not provided, pan flashing shall be installed at the sill of exterior window and door openings. Pan flashing shall be sealed or sloped in such a manner as to direct water to the surface of the exterior wall finish or to the water-resistive barrier for subsequent drainage. Openings using pan flashing shall incorporate flashing or protection at the head and sides.~~

   ~~1.2. In accordance with the flashing design or method of a registered design professional.~~

   ~~1.3. In accordance with other approved methods.~~))
2. At the intersection of chimneys or other masonry construction with frame or stucco walls, with projecting lips on both sides under stucco copings.
3. Under and at the ends of masonry, wood or metal copings and sills.
4. Continuously above all projecting wood trim.
5. Where exterior porches, decks or stairs attach to a wall or floor assembly of wood-frame construction.
6. At wall and roof intersections.
7. At built-in gutters.

R703.5 Wood, hardboard and wood structural panel siding. Wood, hardboard, and wood structural panel siding shall be installed in accordance with this section and Table R703.3(1). Hardboard siding shall comply with CPA/ANSI A135.6. Hardboard siding used as architectural trim shall comply with CPA/ANSI A 135.7.

R703.5.1 Vertical wood siding. Wood siding applied vertically shall be nailed to horizontal nailing strips or blocking set not more than 24 inches (610 mm) on center.

R703.5.2 Panel siding. Three-eighths-inch (9.5 mm) wood structural panel siding shall not be applied directly to studs spaced more than 16 inches (406 mm) on center where long dimension is parallel to studs. Wood structural panel siding 7/16 inch (11.1 mm) or thinner shall not be applied directly to studs spaced more than 24 inches (610 mm) on center. The stud spacing shall not exceed the panel span rating provided by the manufacturer unless the panels are installed with the face grain perpendicular to the studs or over sheathing approved for that stud spacing.

DRAFT

R703.8.4.1 Size and spacing. Veneer ties, if strand wire, shall be not less in thickness than No. 9 U.S. gage [(0.148 inch) (4 mm)] wire and shall have a hook embedded in the mortar joint, or if sheet metal, shall be not less than No. 22 U.S. gage by [(0.0299 inch) (0.76 mm)] 7/8 inch (22 mm) corrugated. Each tie shall support not more than 2.67 square feet (0.25 m^2) of wall area and shall be spaced not more than 32 inches (813 mm) on center horizontally and 24 inches (635 mm) on center vertically.

Exception: In Seismic Design Category D_0, D_1 or D_2 or townhouses in Seismic Design Category C or in wind areas of more than 30 pounds per square foot pressure (1.44 kPa), each tie shall support not more than 2 square feet (0.2 m^2) of wall area.

R703.8.4.1.1 Veneer ties around wall openings. Additional metal ties shall be provided around wall openings greater than 16 inches (406 mm) in either dimension. Metal ties around the perimeter of openings shall be spaced not more than 3 feet (9144 mm) on center and placed within 12 inches (305 mm) of the wall opening.

R703.8.4.2 Grout fill. As an alternative to the airspace required by Table R703.8.4, grout shall be permitted to fill the airspace. Where the airspace is filled with grout, a water-resistive barrier is required over studs or sheathing. Where the airspace is filled, replacing the sheathing and water-resistive barrier with a wire mesh and *approved* water-resistive barrier or an *approved* water-resistive barrier-backed reinforcement attached directly to the studs is permitted.

R703.8.5 Flashing. Flashing shall be located beneath the first course of masonry above finished ground level above the foundation wall or slab and at other points of support, including structural floors, shelf angles and lintels where masonry veneers are designed in accordance with Section R703.8. See Section R703.4 for additional requirements.

R703.8.6 Weepholes. Weepholes shall be provided in the outside wythe of masonry walls at a maximum spacing of 33 inches (838 mm) on center. Weepholes shall be not less than 3/16 inch (5 mm) in diameter. Weepholes shall be located immediately above the flashing.

R703.9 Exterior insulation and finish system (EIFS)/EIFS with drainage. Exterior insulation and finish systems (EIFS) shall comply with this chapter and Section R703.9.1. EIFS with drainage shall comply with this chapter and Section R703.9.2.

R703.9.1 Exterior insulation and finish systems (EIFS). EIFS shall comply with the following:

1. ASTM E2568.
2. EIFS shall be limited to applications over substrates of concrete or masonry wall assemblies.
3. Flashing of EIFS shall be provided in accordance with the requirements of Section R703.4.
4. EIFS shall be installed in accordance with the manufacturer's instructions.
5. EIFS shall terminate not less than 6 inches (152 mm) above the finished ground level.
6. Decorative trim shall not be face-nailed through the EIFS.

R703.9.2 Exterior insulation and finish system (EIFS) with drainage. EIFS with drainage shall comply with the following:

1. ASTM E2568.
2. EIFS with drainage shall be required over all wall assemblies with the exception of substrates of concrete or masonry wall assemblies.
3. EIFS with drainage shall have an average minimum drainage efficiency of 90 percent when tested in accordance with ASTM E2273.
4. The water-resistive barrier shall comply with Section R703.2 or ASTM E2570.
5. The water-resistive barrier shall be applied between the EIFS and the wall sheathing.
6. Flashing of EIFS with drainage shall be provided in accordance with the requirements of Section R703.4.
7. EIFS with drainage shall be installed in accordance with the manufacturer's instructions.
8. EIFS with drainage shall terminate not less than 6 inches (152 mm) above the finished ground level.
9. Decorative trim shall not be face-nailed through the EIFS with drainage.

R703.10 Fiber cement siding.

R703.10.1 Panel siding. Fiber-cement panels shall comply with the requirements of ASTM C1186, Type A, minimum Grade II or ISO 8336, Category A, minimum Class 2. Panels shall be installed with the long dimension either parallel or perpendicular to framing. Vertical and horizontal joints shall occur over framing members and shall be protected with caulking, or with battens or flashing, or be vertical or horizontal shiplap, or otherwise designed to comply with Section R703.1. Panel siding shall be installed with fasteners in accordance with Table R703.3(1) or the approved manufacturer's instructions.

[W] R703.10.2 Lap siding. Fiber-cement lap siding having a maximum width of 12 inches (305 mm) shall comply with the requirements of ASTM C1186, Type A, minimum Grade II or ISO 8336, Category A, minimum Class 2. Lap siding shall be lapped a minimum of 1 1/4 inches (32 mm) and lap siding ((~~not having tongue-and-groove end joints shall have the ends pro-~~

DRAFT

~~tected with caulking, covered with an H-section joint cover, located over a strip of flashing,~~)) shall be installed in accordance with the manufacturer's instructions or shall be designed to comply with Section R703.1. Lap siding courses shall be installed with the fastener heads exposed or concealed, in accordance with Table R703.3(1) or approved manufacturer's instructions.

R703.11 Vinyl siding. Vinyl siding shall be certified and *labeled* as conforming to the requirements of ASTM D3679 by an *approved* quality control agency.

R703.11.1 Installation. Vinyl siding, soffit and accessories shall be installed in accordance with the manufacturer's instructions.

R703.11.1.1 Fasteners. Unless specified otherwise by the manufacturer's instructions, fasteners for vinyl siding shall be 0.120-inch (3 mm) shank diameter nail with a 0.313-inch (8 mm) head or 16-gage staple with a 3/8-inch (9.5 mm) to 1/2-inch (12.7 mm) crown.

R703.11.1.2 Penetration depth. Unless specified otherwise by the manufacturer's instructions, fasteners shall penetrate into building framing. The total penetration into sheathing, furring framing or other nailable substrate shall be a minimum 1-1/4 inches (32 mm). Where specified by the manufacturer's instructions and supported by a test report, fasteners are permitted to penetrate into or fully through nailable sheathing or other nailable substrate of minimum thickness specified by the instructions or test report without penetrating into framing. Where the fastener penetrates fully through the sheathing, the end of the fastener shall extend a minimum of 1/4 inch (6.4 mm) beyond the opposite face of the sheathing or nailable substrate.

R703.11.1.3 Spacing. Unless specified otherwise by the manufacturer's instructions, the maximum spacing between fasteners for horizontal siding shall be 16 inches (406 mm), and for vertical siding 12 inches (305 mm) both horizontally and vertically. Where specified by the manufacturer's instructions and supported by a test report, greater fastener spacing is permitted.

R703.11.2 Installation over foam plastic sheathing. Where vinyl siding or insulated vinyl siding is installed over foam plastic sheathing, the vinyl siding shall comply with Section R703.11 and shall have a design wind pressure resistance in accordance with Table R703.11.2.

Exceptions:

1. Where the foam plastic sheathing is applied directly over wood structural panels, fiberboard, gypsum sheathing or other *approved* backing capable of independently resisting the design wind pressure, the vinyl siding shall be installed in accordance with Sections R703.3.3 and R703.11.1.
2. Where the vinyl siding manufacturer's product specifications provide an approved design wind pressure rating for installation over foam plastic sheathing, use of this design wind pressure rating shall be permitted and the siding shall be installed in accordance with the *manufacturer's installation instructions.*
3. Where the foam plastic sheathing and its attachment have a design wind pressure resistance complying with Sections R316.8 and R301.2.1, the vinyl siding shall be installed in accordance with Sections R703.3.3 and R703.11.1.

DRAFT

TABLE R703.11.2
ADJUSTED MINIMUM DESIGN WIND PRESSURE REQUIREMENT FOR VINYL SIDING

ULTIMATE DESIGN WIND SPEED (MPH)	ADJUSTED MINIMUM DESIGN WIND PRESSURE (ASD) (PSF)[a, b]					
	Case 1: With interior gypsum wallboard[c]			Case 2: Without interior gypsum wallboard[c]		
	Exposure			Exposure		
	B	C	D	B	C	D
110	-44.0	-61.6	-73.1	-62.9	-88.1	-104.4
115	-49.2	-68.9	-81.7	-70.3	-98.4	-116.7
120	-51.8	-72.5	-86.0	-74.0	-103.6	-122.8
130	-62.2	-87.0	-103.2	-88.8	-124.3	-147.4
> 130	Not Allowed[d]					

For SI: 1 inch = 25.4 mm, 1 foot = 304.8 mm, 1 square foot = 0.0929 m^2, 1 mile per hour = 0.447 m/s, 1 pound per square foot = 0.0479 kPa.

a. Linear interpolation is permitted.

b. The table values are based on a maximum 30-foot mean roof height, and effective wind area of 10 square feet Wall Zone 5 (corner), and the ASD design wind pressure from Table R301.2(2) multiplied by the following adjustment factors: 2.6 (Case 1) and 3.7 (Case 2) for wind speeds less than 130 mph and 3.7 (Case 2) for wind speeds greater than 130 mph.

c. Gypsum wallboard, gypsum panel product or equivalent.

d. For the indicated wind speed condition, foam sheathing only on the exterior of frame walls with vinyl siding is not allowed unless the vinyl siding complies with an adjusted minimum design wind pressure requirement as determined in accordance with Note b and the wall assembly is capable of resisting an impact without puncture at least equivalent to that of a wood frame wall with minimum 7/16-inch OSB sheathing as tested in accordance with ASTM E1886.

R806.2 Minimum vent area. The minimum net free ventilating area shall be 1/150 of the area of the vented space.

Exception: The minimum net free ventilation area shall be 1/300 of the vented space provided both of the following conditions are met:

1. In Climate Zones 6, 7 and 8, a Class I or II vapor retarder is installed on the warm-in-winter side of the ceiling.
2. Not less than 40 percent and not more than 50 percent of the required ventilating area is provided by ventilators located in the upper portion of the attic or rafter space. Upper ventilators shall be located not more than 3 feet (914 mm) below the ridge or highest point of the space, measured vertically. The balance of the required ventilation provided shall be located in the bottom one-third of the *attic* space. Where the location of wall or roof framing members conflicts with the installation of upper ventilators, installation more than 3 feet (914 mm) below the ridge or highest point of the space shall be permitted.

R806.3 Vent and insulation clearance. Where eave or cornice vents are installed, blocking, bridging and insulation shall not block the free flow of air. Not less than a 1-inch (25 mm) space shall be provided between the insulation and the roof sheathing and at the location of the vent.

R806.4 Installation and weather protection. Ventilators shall be installed in accordance with manufacturer's instructions. Installation of ventilators in roof systems shall be in accordance with the requirements of Section R903. Installation of ventilators in wall systems shall be in accordance with the requirements of Section R703.1.

[W] R806.5 Unvented attic and unvented enclosed rafter assemblies. Unvented *attics* and unvented enclosed roof framing assemblies created by ceilings that are applied directly to the underside of the roof framing members and structural roof sheathing applied directly to the top of the roof framing members/rafters, shall be permitted where all the following conditions are met:

1. The unvented *attic* space is completely within the *building thermal envelope*.
2. Interior Class I vapor retarders are not installed on the ceiling side (*attic* floor) of the unvented *attic* assembly or on the ceiling side of the unvented enclosed roof framing assembly.
3. Where wood shingles or shakes are used, a minimum 1/4-inch (6.4 mm) vented airspace separates the shingles or shakes and the roofing underlayment above the structural sheathing.
4. ((~~In Climate Zones 5, 6, 7 and 8, any~~)) Any *air-impermeable insulation* shall be a Class II vapor retarder, or shall have a Class II vapor retarder coating or covering in direct contact with the underside of the insulation.
5. Insulation shall comply with Item 5.3 and either Item 5.1 or 5.2:

   5.1. Item 5.1.1, 5.1.2, 5.1.3 or 5.1.4 shall be met, depending on the air permeability of the insulation directly under the structural roof sheathing.

   5.1.1. Where only *air-impermeable insulation* is provided, it shall be applied in direct contact with the underside of the structural roof sheathing.

   5.1.2. Where *air-permeable insulation* is installed directly below the structural sheathing, minimum R-10 rigid board or sheet insulation shall be installed directly above the structural roof sheathing ((~~in accordance with the *R*-values in Table R806.5~~)) for condensation control.

   5.1.3. Where both *air-impermeable* and *air-permeable insulation* are provided, ((~~the~~)) minimum R-10 *air-impermeable insulation* shall be applied in direct contact with the underside of the structural roof sheathing in accordance with Item 5.1.1 ((~~and shall be in accordance with the *R*-values in Table R806.5~~)) for condensation control. The *air-permeable insulation* shall be installed directly under the *air-impermeable insulation*.

   5.1.4. Alternatively, sufficient rigid board or sheet insulation shall be installed directly above the structural roof sheathing to maintain the monthly average temperature of the underside of the structural roof sheathing above 45°F (7°C). For calculation purposes, an interior air temperature of 68°F (20°C) is assumed and the exterior air temperature is assumed to be the monthly average outside air temperature of the three coldest months.

   5.2. In Climate Zones 1, 2 and 3, air-permeable insulation installed in unvented *attics* shall meet the following requirements:

   5.2.1. An approved *vapor diffusion port* shall be installed not more than 12 inches (305 mm) from the highest point of the roof, measured vertically from the highest point of the roof to the lower edge of the port.

   5.2.2. The port area shall be greater than or equal to 1:600 of the ceiling area. Where there are multiple ports in the attic, the sum of the port areas shall be greater than or equal to the area requirement.

   5.2.3. The vapor-permeable membrane in the *vapor diffusion port* shall have a vapor permeance rating of greater than or equal to 20 perms when tested in accordance with Procedure A of ASTM E96.

   5.2.4. The *vapor diffusion port* shall serve as an air barrier between the *attic* and the exterior of the building.

DRAFT

roof intersects a vertical sidewall. Where flashing is of metal, the metal shall be corrosion resistant with a thickness of not less than 0.019 inch (0.5 mm) (No. 26 galvanized sheet).

R903.2.2 Crickets and saddles. A cricket or saddle shall be installed on the ridge side of any chimney or penetration more than 30 inches (762 mm) wide as measured perpendicular to the slope. Cricket or saddle coverings shall be sheet metal or of the same material as the roof covering.

Exception: Unit skylights installed in accordance with Section R308.6 and flashed in accordance with the manufacturer's instructions shall be permitted to be installed without a cricket or saddle.

R903.3 Coping. Parapet walls shall be properly coped with noncombustible, weatherproof materials of a width not less than the thickness of the parapet wall.

R903.4 Roof drainage. Unless roofs are sloped to drain over roof edges, roof drains shall be installed at each low point of the roof.

[W] R903.4.1 Secondary (emergency overflow) drains or scuppers. Where roof drains are required, secondary emergency overflow ((~~roof~~)) drains or scuppers shall be provided where the roof perimeter construction extends above the roof in such a manner that water will be entrapped if the primary drains allow buildup for any reason. Overflow drains having the same size as the roof drains shall be installed with the inlet flow line located 2 inches (51 mm) above the low point of the roof, or overflow scuppers having three times the size of the roof drains and having a minimum opening height of 4 inches (102 mm) shall be installed in the adjacent parapet walls with the inlet flow located 2 inches (51 mm) above the low point of the roof served. The installation and sizing of overflow drains, leaders and conductors shall comply with Sections ((~~1106 and 1108~~)) 1101 and 1103 of the ((~~*International*~~)) *Uniform Plumbing Code*, as applicable.

Overflow drains shall discharge to an *approved* location. ((~~and shall not be connected to roof drain lines.~~))

SECTION R904
MATERIALS

R904.1 Scope. The requirements set forth in this section shall apply to the application of roof covering materials specified herein. Roof assemblies shall be applied in accordance with this chapter and the manufacturer's installation instructions. Installation of roof assemblies shall comply with the applicable provisions of Section R905.

R904.2 Compatibility of materials. Roof assemblies shall be of materials that are compatible with each other and with the building or structure to which the materials are applied.

R904.3 Material specifications and physical characteristics. Roof covering materials shall conform to the applicable standards listed in this chapter.

R904.4 Product identification. Roof covering materials shall be delivered in packages bearing the manufacturer's identifying marks and *approved* testing agency *labels* required. Bulk shipments of materials shall be accompanied by the same information issued in the form of a certificate or on a bill of lading by the manufacturer.

DRAFT

SECTION R905
REQUIREMENTS FOR ROOF COVERINGS

R905.1 Roof covering application. Roof coverings shall be applied in accordance with the applicable provisions of this section and the manufacturer's installation instructions. Unless otherwise specified in this section, roof coverings shall be installed to resist the component and cladding loads specified in Table R301.2(2), adjusted for height and exposure in accordance with Table R301.2(3).

R905.1.1 Underlayment. *Underlayment* for asphalt shingles, clay and concrete tile, metal roof shingles, mineral-surfaced roll roofing, slate and slate-type shingles, wood shingles, wood shakes, metal roof panels and *photovoltaic shingles* shall conform to the applicable standards listed in this chapter. *Underlayment* materials required to comply with ASTM D226, D1970, D4869 and D6757 shall bear a label indicating compliance to the standard designation and, if applicable, type classification indicated in Table R905.1.1(1). *Underlayment* shall be applied in accordance with Table R905.1.1(2). *Underlayment* shall be attached in accordance with Table R905.1.1(3).

Exceptions:

1. As an alternative, self-adhering polymer-modified bitumen *underlayment* complying with ASTM D1970 installed in accordance with both the *underlayment* manufacturer's and roof covering manufacturer's instructions for the deck material, roof ventilation configuration and climate exposure for the roof covering to be installed, shall be permitted.
2. As an alternative, a minimum 4-inch-wide (102 mm) strip of self-adhering polymer-modified bitumen membrane complying with ASTM D1970, installed in accordance with the *manufacturer's installation instructions* for the deck material, shall be applied over all joints in the roof decking. An *approved underlayment* for the applicable roof

or foundation wall on all sides. Footings shall be founded on natural, undisturbed earth or engineered fill below frost depth. In areas not subjected to freezing, footings shall be not less than 12 inches (305 mm) below finished *grade*.

R1001.2.1 Ash dump cleanout. Cleanout openings located within foundation walls below fireboxes, where provided, shall be equipped with ferrous metal or masonry doors and frames constructed to remain tightly closed except when in use. Cleanouts shall be located to allow *access* so that ash removal will not create a hazard to combustible materials.

R1001.3 Seismic reinforcing. Masonry or concrete chimneys in Seismic Design Category D_0, D_1 or D_2 shall be reinforced. Reinforcing shall conform to the requirements set forth in Table R1001.1 and Section R606.

R1001.3.1 Vertical reinforcing. For chimneys up to 40 inches (1016 mm) wide, four No. 4 continuous vertical bars shall be placed between wythes of *solid masonry* or within the cells of hollow unit masonry and grouted in accordance with Section R606. Grout shall be prevented from bonding with the flue liner so that the flue liner is free to move with thermal expansion. For chimneys more than 40 inches (1016 mm) wide, two additional No. 4 vertical bars shall be provided for each additional flue incorporated into the chimney or for each additional 40 inches (1016 mm) in width or fraction thereof.

R1001.3.2 Horizontal reinforcing. Vertical reinforcement shall be placed within 1/4-inch (6.4 mm) ties, or other reinforcing of equivalent net cross-sectional area, placed in the bed joints in accordance with Section R606 at not less than every 18 inches (457 mm) of vertical height. Two such ties shall be installed at each bend in the vertical bars.

R1001.4 Seismic anchorage. Masonry or concrete chimneys in Seismic Design Category D_0, D_1 or D_2 shall be anchored at each floor, ceiling or roof line more than 6 feet (1829 mm) above *grade*, except where constructed completely within the exterior walls. Anchorage shall conform to the requirements of Section R1001.4.1.

R1001.4.1 Anchorage. Two 3/16-inch by 1-inch (5 mm by 25 mm) straps shall be embedded not less than 12 inches (305 mm) into the chimney. Straps shall be hooked around the outer bars and extend 6 inches (152 mm) beyond the bend. Each strap shall be fastened to not less than four floor ceiling or floor joists or rafters with two 1/2-inch (12.7 mm) bolts.

R1001.4.1.1 Cold-formed steel framing. Where cold-formed steel framing is used, the location where the 1/2-inch (12.7 mm) bolts are used to attach the straps to the framing shall be reinforced with not less than a 3-inch × 3-inch × 0.229-inch (76 mm × 76 mm × 5.8 mm) steel plate on top of the strap that is screwed to the framing with not fewer than seven No. 6 screws for each bolt.

R1001.5 Firebox walls. Masonry fireboxes shall be constructed of *solid masonry* units, hollow masonry units grouted solid, stone or concrete. Where a lining of firebrick not less than 2 inches (51 mm) thick or other *approved* lining is provided, the minimum thickness of back and sidewalls shall each be 8 inches (203 mm) of *solid masonry*, including the lining. The width of joints between firebricks shall not be greater than 1/4 inch (6.4 mm). Where a lining is not provided, the total minimum thickness of back and side walls shall be 10 inches (254 mm) of *solid masonry*. Firebrick shall conform to ASTM C27 or C1261 and shall be laid with medium- duty refractory mortar conforming to ASTM C199.

R1001.5.1 Steel fireplace units. Installation of steel fireplace units with *solid masonry* to form a masonry fireplace is permitted where installed either in accordance with the requirements of their listing or the requirements of this section. Steel fireplace units incorporating a steel firebox lining shall be constructed with steel not less than 1/4 inch (6.4 mm) thick, and an air-circulating chamber that is ducted to the interior of the building. The firebox lining shall be encased with *solid masonry* to provide a total thickness at the back and sides of not less than 8 inches (203 mm), of which not less than 4 inches (102 mm) shall be of *solid masonry* or concrete. Circulating air ducts used with steel fireplace units shall be constructed of metal or masonry.

R1001.6 Firebox dimensions. The firebox of a concrete or masonry fireplace shall have a depth of not less than 20 inches (508 mm). The throat shall be not less than 8 inches (203 mm) above the fireplace opening. The throat opening shall be not less than 4 inches (102 mm) deep. The cross-sectional area of the passageway above the firebox, including the throat, damper and smoke chamber, shall be not less than the cross-sectional area of the flue.

Exception: Rumford fireplaces shall be permitted provided that the depth of the fireplace is not less than 12 inches (305 mm) and not less than one-third of the width of the fireplace opening, that the throat is not less than 12 inches (305 mm) above the lintel and is not less than one-twentieth the cross-sectional area of the fireplace opening.

R1001.7 Lintel and throat. Masonry over a fireplace opening shall be supported by a lintel of noncombustible material. The minimum required bearing length on each end of the fireplace opening shall be 4 inches (102 mm). The fireplace throat or damper shall be located not less than 8 inches (203 mm) above the lintel.

[W] R1001.7.1 Damper. Masonry fireplaces shall be equipped with a ferrous metal damper located not less than 8 inches (203 mm) above the top of the fireplace opening. Dampers shall be installed in the fireplace or the chimney venting the fireplace, and shall be operable from the room containing the fireplace. Fireplaces shall be provided with each of the following:

1. Tightly fitting flue dampers, operated by a *readily accessible* manual or *approved* automatic control.

   Exception: Fireplaces with gas logs shall be installed in accordance with the *International Mechanical Code* Section 901, except that the standards for liquefied petroleum gas installations shall be NFPA 58 (*Liquefied Petroleum Gas Code*) and NFPA 54 (*National Fuel Gas Code*).

DRAFT

2. An outside source for *combustion air* ducted into the firebox. The duct shall be at least 6 square inches, and shall be provided with an operable outside air duct damper.
3. Site built fireplaces shall have tight-fitting glass or metal doors, or a flue draft induction fan or as *approved* for minimizing backdrafting. Factory built fireplaces shall use doors *listed* for the installed *appliance.*

R1001.8 Smoke chamber. Smoke chamber walls shall be constructed of *solid masonry* units, hollow masonry units grouted solid, stone or concrete. The total minimum thickness of front, back and side walls shall be 8 inches (203 mm) of *solid masonry*. The inside surface shall be parged smooth with refractory mortar conforming to ASTM C199. Where a lining of firebrick not less than 2 inches (51 mm) thick, or a lining of vitrified clay not less than 5/8 inch (16 mm) thick, is provided, the total minimum thickness of front, back and side walls shall be 6 inches (152 mm) of *solid masonry*, including the lining. Firebrick shall conform to ASTM C1261 and shall be laid with medium-duty refractory mortar conforming to ASTM C199. Vitrified clay linings shall conform to ASTM C315.

R1001.8.1 Smoke chamber dimensions. The inside height of the smoke chamber from the fireplace throat to the beginning of the flue shall not be greater than the inside width of the fireplace opening. The inside surface of the smoke chamber shall not be inclined more than 45 degrees (0.79 rad) from vertical where prefabricated smoke chamber linings are used or where the smoke chamber walls are rolled or sloped rather than corbeled. Where the inside surface of the smoke chamber is formed by corbeled masonry, the walls shall not be corbeled more than 30 degrees (0.52 rad) from vertical.

R1001.9 Hearth and hearth extension. Masonry fireplace hearths and hearth extensions shall be constructed of concrete or masonry, supported by noncombustible materials, and reinforced to carry their own weight and all imposed loads. Combustible material shall not remain against the underside of hearths and hearth extensions after construction.

R1001.9.1 Hearth thickness. The minimum thickness of fireplace hearths shall be 4 inches (102 mm).

R1001.9.2 Hearth extension thickness. The minimum thickness of hearth extensions shall be 2 inches (51 mm).

Exception: Where the bottom of the firebox opening is raised not less than 8 inches (203 mm) above the top of the hearth extension, a hearth extension of not less than 3/8-inch-thick (10 mm) brick, concrete, stone, tile or other *approved* noncombustible material is permitted.

R1001.10 Hearth extension dimensions. Hearth extensions shall extend not less than 16 inches (406 mm) in front of and not less than 8 inches (203 mm) beyond each side of the fireplace opening. Where the fireplace opening is 6 square feet (0.6 m^2) or larger, the hearth extension shall extend not less than 20 inches (508 mm) in front of and not less than 12 inches (305 mm) beyond each side of the fireplace opening.

DRAFT

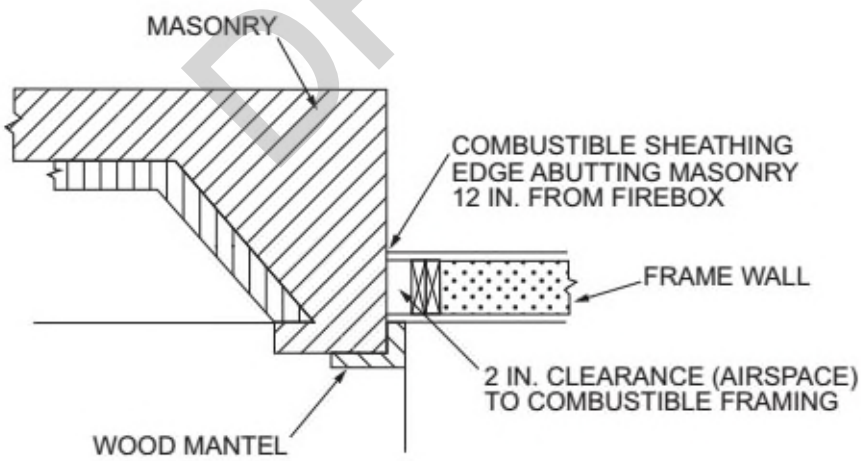

For SI: 1 inch = 25.4 mm.

FIGURE R1001.11
CLEARANCE FROM COMBUSTIBLES

R1001.11 Fireplace clearance. Wood beams, joists, studs and other combustible material shall have a clearance of not less than 2 inches (51 mm) from the front faces and sides of masonry fireplaces and not less than 4 inches (102 mm) from the back faces of masonry fireplaces. The airspace shall not be filled, except to provide fireblocking in accordance with Section R1001.12.

Exceptions:

1. Masonry fireplaces *listed* and *labeled* for use in contact with combustibles in accordance with UL 127 and installed in accordance with the manufacturer's instructions are permitted to have combustible material in contact with their exterior surfaces.

2. Where masonry fireplaces are part of masonry or concrete walls, combustible materials shall not be in contact with the masonry or concrete walls less than 12 inches (306 mm) from the inside surface of the nearest firebox lining.
3. Exposed combustible trim and the edges of sheathing materials such as wood siding, flooring and gypsum board shall be permitted to abut the masonry fireplace sidewalls and hearth extension in accordance with Figure R1001.11, provided such combustible trim or sheathing is not less than 12 inches (305 mm) from the inside surface of the nearest firebox lining.
4. Exposed combustible mantels or trim is permitted to be placed directly on the masonry fireplace front surrounding the fireplace opening providing such combustible materials are not placed within 6 inches (152 mm) of a fireplace opening. Combustible material within 12 inches (306 mm) of the fireplace opening shall not project more than 1/8 inch (3 mm) for each 1-inch (25 mm) distance from such an opening.

R1001.12 Fireplace fireblocking. Fireplace fireblocking shall comply with the provisions of Section R602.8.

SECTION R1002
MASONRY HEATERS

R1002.1 Definition. A masonry heater is a heating *appliance* constructed of concrete or *solid masonry*, hereinafter referred to as masonry, that is designed to absorb and store heat from a solid-fuel fire built in the firebox by routing the exhaust gases through internal heat exchange channels in which the flow path downstream of the firebox includes flow in a horizontal or downward direction before entering the chimney and that delivers heat by radiation from the masonry surface of the heater.

[W] R1002.2 Installation. Masonry heaters shall be installed in accordance with this section and shall be a masonry heater type *approved* by the Department of Ecology. Masonry heaters shall comply with one of the following:

1. Masonry heaters shall comply with the requirements of ASTM E1602.
2. Masonry heaters shall be *listed* and *labeled* in accordance with UL 1482 or CEN 15250 and installed in accordance with the manufacturer's instructions.

[W] R1002.2.1 Combustion air and doors. Masonry heaters shall be provided with both of the following:

1. Primary *combustion air* ducted from the outside of the structure to the *appliance.*
2. Tight fitting ceramic glass or metal doors. Flue dampers, when provided, shall have an external control and when in the closed position shall have a net free area of not less than 5% of the flue cross sectional area.

R1002.3 Footings and foundation. The firebox floor of a masonry heater shall be a minimum thickness of 4 inches (102 mm) of noncombustible material and be supported on a noncombustible footing and foundation in accordance with Section R1003.2.

R1002.4 Seismic reinforcing. In Seismic Design Categories D_0, D_1 and D_2, masonry heaters shall be anchored to the masonry foundation in accordance with Section R1003.3. Seismic reinforcing shall not be required within the body of a masonry heater whose height is equal to or less than 3.5 times its body width and where the masonry chimney serving the heater is not supported by the body of the heater. Where the masonry chimney shares a common wall with the facing of the masonry heater, the chimney portion of the structure shall be reinforced in accordance with Section R1003.

R1002.5 Masonry heater clearance. Combustible materials shall not be placed within 36 inches (914 mm) of the outside surface of a masonry heater in accordance with NFPA 211 Section 8-7 (clearances for solid-fuel-burning *appliances*), and the required space between the heater and combustible material shall be fully vented to permit the free flow of air around all heater surfaces.

Exceptions:

1. Where the masonry heater wall is not less than 8 inches (203 mm) thick of *solid masonry* and the wall of the heat exchange channels is not less than 5 inches (127 mm) thick of *solid masonry*, combustible materials shall not be placed within 4 inches (102 mm) of the outside surface of a masonry heater. A clearance of not less than 8 inches (203 mm) shall be provided between the gas-tight capping slab of the heater and a combustible ceiling.
2. Masonry heaters listed and labeled in accordance with UL 1482 or CEN 15250 shall be installed in accordance with the listing specifications and the manufacturer's written instructions.

SECTION R1003
MASONRY CHIMNEYS

R1003.1 Definition. A masonry chimney is a chimney constructed of *solid masonry* units, hollow masonry units grouted solid, stone or concrete, hereinafter referred to as masonry. Masonry chimneys shall be constructed, anchored, supported and reinforced as required in this chapter.

DRAFT

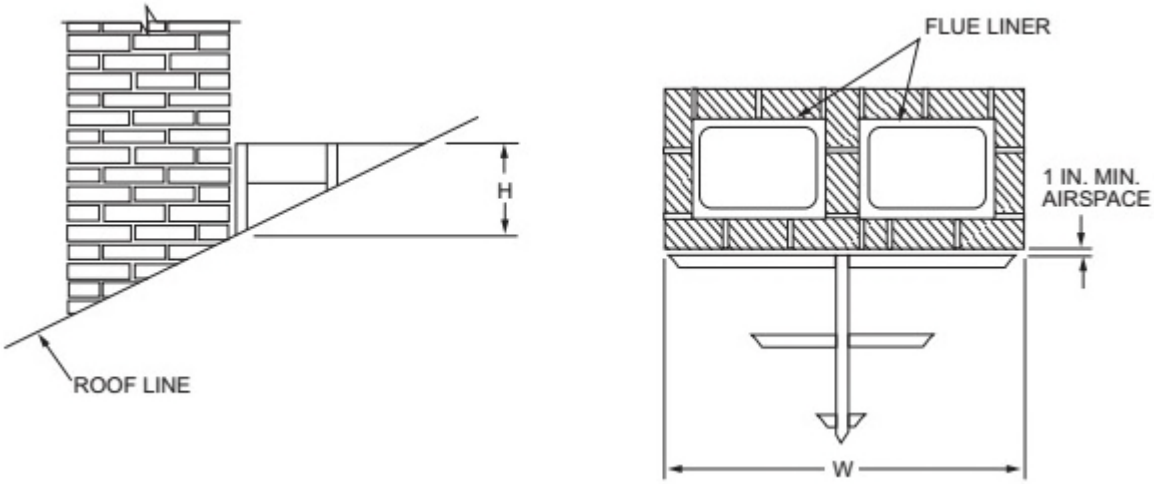

For SI: 1 inch = 25.4 mm.

FIGURE R1003.20
CHIMNEY CRICKET

DRAFT

SECTION R1004
FACTORY-BUILT FIREPLACES

[W] R1004.1 General. Factory-built fireplaces shall be *listed* and *labeled* and shall be installed in accordance with the conditions of the *listing*. Factory-built fireplaces shall be tested in accordance with UL 127.

[W] R1004.1.1 Emission Standards for Factory-built Fireplaces. No new or used factory-built fireplace shall be installed in Washington state unless it is certified and *labeled* in accordance with procedures and criteria specified in ASTM E2558 Standard Test Method for determining particulate matter emission from fires in low mass wood burning fireplaces.

To certify an entire fireplace model line, the internal assembly shall be tested to determine its particulate matter emission performance. Retesting and recertifying is required if the design and construction specifications of the fireplace model line internal assembly change. Testing for certification shall be performed by a Washington state Department of Ecology (DOE) *approved* and U.S. Environmental Protection Agency (EPA) accredited laboratory.

[W] R1004.1.2 Emission Standards for Certified Masonry and Concrete Fireplaces. Masonry and concrete fireplace model lines certified to *Washington State Building Code* Standard 31-2 prior to July 1, 2013, may retain certification provided the design and construction specifications of the fireplace model line internal assembly do not change.

R1004.2 Hearth extensions. Hearth extensions of *approved* factory-built fireplaces shall be installed in accordance with the *listing* of the fireplace. The hearth extension shall be readily distinguishable from the surrounding floor area. Listed and labeled hearth extensions shall comply with UL 1618.

R1004.3 Decorative shrouds. Decorative shrouds shall not be installed at the termination of chimneys for factory-built fireplaces except where the shrouds are listed and *labeled* for use with the specific factory-built fireplace system and installed in accordance with the manufacturer's instructions.

R1004.4 Unvented gas log heaters. An unvented gas log heater shall not be installed in a factory-built fireplace unless the fireplace system has been specifically tested, *listed* and *labeled* for such use in accordance with UL 127.

R1004.5 Gasketed fireplace doors. A gasketed fireplace door shall not be installed on a factory-built fireplace except where the fireplace system has been specifically tested, *listed* and *labeled* for such use in accordance with UL 127.

SECTION R1005
FACTORY-BUILT CHIMNEYS

R1005.1 Listing. *Factory-built chimneys* shall be *listed* and *labeled* and shall be installed and terminated in accordance with the *manufacturer's installation instructions*.

R1005.2 Decorative shrouds. Decorative shrouds shall not be installed at the termination of *factory-built chimneys* except where the shrouds are *listed* and *labeled* for use with the specific *factory-built chimney* system and installed in accordance with the *manufacturer's installation instructions*.

R1005.3 Solid-fuel appliances. *Factory-built chimneys* installed in *dwelling units* with solid-fuel-burning *appliances* shall comply with the Type HT requirements of UL 103 and shall be marked "Type HT" and "Residential Type and Building Heating Appliance Chimney."

Exception: *Chimneys* for use with open combustion chamber fireplaces shall comply with the requirements of UL 103 and shall be marked "Residential Type and Building Heating Appliance Chimney."

Chimneys for use with open combustion chamber *appliances* installed in buildings other than *dwelling units* shall comply with the requirements of UL 103 and shall be marked "Building Heating Appliance Chimney" or "Residential Type and Building Heating Appliance Chimney."

R1005.4 Factory-built fireplaces. *Chimneys* for use with factory-built fireplaces shall comply with the requirements of UL 127.

R1005.5 Support. Where *factory-built chimneys* are supported by structural members, such as joists and rafters, those members shall be designed to support the additional load.

R1005.6 Medium-heat appliances. *Factory-built chimneys* for medium-heat *appliances* producing flue gases having a temperature above 1,000°F (538°C), measured at the entrance to the *chimney*, shall comply with UL 959.

R1005.7 Factory-built chimney offsets. Where a *factory-built chimney* assembly incorporates offsets, no part of the *chimney* shall be at an angle of more than 30 degrees (0.52 rad) from vertical at any point in the assembly and the chimney assembly shall not include more than four elbows.

R1005.8 Insulation shield. Where *factory-built chimneys* pass through insulated assemblies, an insulation shield constructed of steel having a thickness of not less than 0.0187 inch (0.4712 mm) (No. 26 gage) shall be installed to provide clearance between the *chimney* and the insulation material. The clearance shall be not less than the clearance to combustibles specified by the chimney *manufacturer's installation instructions*. Where *chimneys* pass through attic space, the shield shall terminate not less than 2 inches (51 mm) above the insulation materials and shall be secured in place to prevent displacement. Insulation shields provided as part of a *listed* chimney system shall be installed in accordance with the manufacturer's installation instructions.

DRAFT

SECTION R1006
EXTERIOR AIR SUPPLY

R1006.1 Exterior air. Factory-built or masonry fireplaces covered in this chapter shall be equipped with an exterior air supply to ensure proper fuel combustion unless the room is mechanically ventilated and controlled so that the indoor pressure is neutral or positive.

[W] ((~~R1006.1.1 Factory-built fireplaces.~~ ~~Exterior *combustion air* ducts for factory-built fireplaces shall be a *listed* component of the fireplace and shall be installed in accordance with the fireplace manufacturer's instructions.~~))

[W] ((~~R1006.1.2 Masonry fireplaces.~~ ~~*Listed combustion air* ducts for masonry fireplaces shall be installed in accordance with the terms of their *listing* and the manufacturer's instructions.~~))

[W] ((~~R1006.2 Exterior air intake.~~ ~~The exterior air intake shall be capable of supplying all *combustion air* from the exterior of the *dwelling* or from spaces within the *dwelling* ventilated with outdoor air such as nonmechanically ventilated crawl or *attic* spaces. The exterior air intake shall not be located within the garage or basement of the dwelling. The exterior air intake, for other than listed factory-built fireplaces, shall not be located at an elevation higher than the firebox. The exterior air intake shall be covered with a corrosion-resistant screen of 1/4-inch (6.4 mm) mesh.~~))

[W] R1006.2 Solid fuel burning appliances and fireplaces. Solid-fuel-burning *appliances* and fireplaces shall be provided with tight-fitting metal or ceramic glass doors, and:

1. A source from outside the structure of primary *combustion air*, connected to the *appliance* as per manufacturer's specification. The air inlet shall originate at a point below the fire box. The duct shall be 4 inches or greater in diameter, not exceed 20 feet in length, and be installed as per manufacturer's instructions; or
2. The *appliance* and manufacturer's recommended *combustion air* supply, as an installed unit, shall be certified by an independent testing laboratory to have passed Test No. 11-Negative Pressure Test, Section 12.3, of ULC S627-M1984 "Space Heaters for Use with Solid Fuels," modified as follows:
   - 2.1 Negative pressure of 8 Pascal shall be initially established with the chamber sealed and the air supply, if not directly connected to the *appliance*, closed off.
   - 2.2 The air supply if not directly connected to the *appliance*, shall then be opened.
   - 2.3 The maximum allowable air exchange rate from chamber leakage and intentional air supply for the unit (*appliance* with *combustion air* supply) in the test chamber is 3.5 air changes per hour, or 28 cfm (cubic feet of air per minute), whichever is less.

Exception: *Combustion air* may be supplied to the room in which the solid-fuel-burning *appliance* is located in lieu of direct ducting, provided that one of the following conditions is met:

1. The solid-fuel-burning *appliance* is part of a central heating plant and installed in an un*conditioned space* in conformance with the *International Mechanical Code;* or
2. The solid-fuel-burning *appliance* is installed in existing construction directly on a concrete floor or surrounded by masonry materials as in a fireplace. The *combustion air* terminus shall be located as close to the solid fuel burning *appliance* as possible and shall be provided with a barometric damper or equivalent. The *combustion air* source shall be specified by the manufacturer or no less than 4 inches in diameter or the equivalent in area or as *approved.*

R1006.3 Clearance. Unlisted *combustion air* ducts shall be installed with a minimum 1-inch (25 mm) clearance to combustibles for all parts of the duct within 5 feet (1524 mm) of the duct outlet.

[W] ((~~R1006.4 Passageway.~~ ~~The *combustion air* passageway shall be not less than 6 square inches (3870 mm^2) and not more than 55 square inches (0.035 m^2), except that *combustion air* systems for listed fireplaces shall be constructed in accordance with the fireplace manufacturer's instructions.~~)) RESERVED

R1006.5 Outlet. The exterior air outlet shall be located in the back or side of the firebox chamber or shall be located outside of the firebox, at the level of the hearth and not greater than 24 inches (610 mm) from the firebox opening. The outlet shall be closable and designed to prevent burning material from dropping into concealed combustible spaces.

DRAFT

Part V—Mechanical

CHAPTER 12

MECHANICAL ADMINISTRATION

User notes:

About this chapter: *Chapter 12 supplements Chapter 1 and establishes the scope of coverage for Chapters 13 through 24. The applicability of code provisions to existing mechanical systems and appliances is established herein.*

Code development reminder: *Code change proposals to this chapter will be considered by the IRC—Plumbing/Mechanical Code Development Committee during the 2018 (Group A) Code Development Cycle. See explanation on page iv.*

SECTION M1201
GENERAL

[W] M1201.1 Scope. The provisions of Chapters 12 through 24 shall regulate the design, installation, maintenance, *alteration* and inspection of mechanical systems that are permanently installed and used to control environmental conditions within buildings. These chapters shall also regulate those mechanical systems, system components, *equipment* and *appliances* specifically addressed in this code.

Exception: The standards for liquefied petroleum gas installations shall be NFPA 58 (*Liquefied Petroleum Gas Code*) and ANSI Z223.1/NFPA 54 (*National Fuel Gas Code*).

M1201.2 Application. In addition to the general administration requirements of Chapter 1, the administrative provisions of this chapter shall apply to the mechanical requirements of Chapters 13 through 24.

[W] M1201.3 Construction documents. The plans and specifications shall show in sufficient detail pertinent data and features of the materials, *equipment* and systems as herein governed including, but not limited to: design criteria, size and type of apparatus and *equipment*, systems and *equipment* controls, provisions for *combustion air* to fuel-burning *appliances*, and other pertinent data to indicate conformance with the requirements of this code.

[W] M1201.4 Testing. At the discretion of the *building official*, flow testing may be required to verify that the mechanical system satisfies the requirements of this code. Specific testing required by other sections of this code shall be performed. Flow testing may be performed using flow hoods measuring at the intake or exhaust points of the system, in-line pitot tube, or pitot-traverse type measurement systems in the duct, short-term tracer gas measurements, or other means *approved* by the *building official*.

SECTION M1202
EXISTING MECHANICAL SYSTEMS

M1202.1 Additions, alterations or repairs. *Additions*, *alterations*, renovations or repairs to a mechanical system shall conform to the requirements for a new mechanical system without requiring the existing mechanical system to comply with all of the requirements of this code. *Additions*, *alterations* or repairs shall not cause an existing mechanical system to become unsafe, hazardous or overloaded. Minor *additions*, *alterations* or repairs to existing mechanical systems shall meet the provisions for new construction, unless such work is done in the same manner and arrangement as was in the existing system, is not hazardous, and is *approved*.

M1202.2 Existing installations. Except as otherwise provided for in this code, a provision in this code shall not require the removal, *alteration* or abandonment of, nor prevent the continued use and maintenance of, an existing mechanical system lawfully in existence at the time of the adoption of this code.

M1202.3 Maintenance. Mechanical systems, both existing and new, and parts thereof shall be maintained in proper operating condition in accordance with the original design and in a safe and sanitary condition. Devices or safeguards that are required by this code shall be maintained in compliance with the code edition under which such devices and safeguards were installed. The owner or the owner's designated agent shall be responsible for maintenance of the mechanical systems. To determine compliance with this provision, the *building official* shall have the authority to require a mechanical system to be reinspected.

DRAFT

imum clearances greater than 12 inches (305 mm), Table M1306.2 shall not be used to reduce the clearance to less than 12 inches (305 mm).

SECTION M1307
APPLIANCE INSTALLATION

M1307.1 General. Installation of *appliances* shall conform to the conditions of their *listing* and *label* and the manufacturer's instructions. The manufacturer's operating and installation instructions shall remain attached to the *appliance*.

[W] M1307.2 Anchorage of appliances. *Appliances* designed to be fixed in position shall be fastened or anchored in an *approved* manner. ((~~In Seismic Design Categories D_0, D_1 and D_2, and in townhouses in Seismic Design Category C, water heaters and thermal~~)) Thermal storage units shall be anchored or strapped to resist horizontal displacement caused by earthquake motion in accordance with one of the following:

1. Anchorage and strapping shall be designed to resist a horizontal force equal to one-third of the operating weight of the water ((~~heater~~)) storage tank, acting in any horizontal direction. ((~~Strapping shall be at points within the upper one-third and lower one-third of the *appliance's* vertical dimensions. At the lower point, the strapping shall maintain a minimum distance of 4 inches (102 mm) above the controls.~~))
2. The anchorage strapping shall be in accordance with the appliance manufacturer's recommendations.

Seismic anchorage and strapping of water heaters shall be in accordance with Section 507.2 of the *Uniform Plumbing Code.*

M1307.3 Elevation of ignition source. *Appliances* having an *ignition source* shall be elevated such that the source of ignition is not less than 18 inches (457 mm) above the floor in garages. For the purpose of this section, rooms or spaces that are not part of the *living space* of a *dwelling unit* and that communicate with a private garage through openings shall be considered to be part of the garage.

Exception: Elevation of the ignition source is not required for appliances that are listed as flammable-vapor-ignition resistant.

M1307.3.1 Protection from impact. *Appliances* shall not be installed in a location subject to vehicle damage except where protected by *approved* barriers.

M1307.4 Hydrogen generating and refueling operations. *Ventilation* shall be required in accordance with Section M1307.4.1, M1307.4.2 or M1307.4.3 in private garages that contain hydrogen-generating *appliances* or refueling systems. For the purpose of this section, rooms or spaces that are not part of the *living space* of a *dwelling unit* and that communicate directly with a private garage through openings shall be considered to be part of the private garage.

M1307.4.1 Natural ventilation. Indoor locations intended for hydrogen-generating or refueling operations shall be limited to a maximum floor area of 850 square feet (79 m^2) and shall communicate with the outdoors in accordance with Sections M1307.4.1.1 and M1307.4.1.2. The maximum rated output capacity of hydrogen-generating *appliances* shall not exceed 4 standard cubic feet per minute (1.9 L/s) of hydrogen for each 250 square feet (23 m^2) of floor area in such spaces. The minimum cross-sectional dimension of air openings shall be 3 inches (76 mm). Where ducts are used, they shall be of the same cross-sectional area as the free area of the openings to which they connect. In those locations, *equipment* and *appliances* having an *ignition source* shall be located so that the source of ignition is not within 12 inches (305 mm) of the ceiling.

M1307.4.1.1 Two openings. Two permanent openings shall be constructed within the garage. The upper opening shall be located entirely within 12 inches (305 mm) of the ceiling of the garage. The lower opening shall be located entirely within 12 inches (305 mm) of the floor of the garage. Both openings shall be constructed in the same exterior wall. The openings shall communicate directly with the outdoors and shall have a minimum free area of 1/2 square foot per 1,000 cubic feet (1.7 m^2/1000 m^3) of garage volume.

M1307.4.1.2 Louvers and grilles. In calculating free area required by Section M1307.4.1, the required size of openings shall be based on the net free area of each opening. If the free area through a design of louver or grille is known, it shall be used in calculating the size opening required to provide the free area specified. If the design and free area are not known, it shall be assumed that wood louvers will have a 25-percent free area and metal louvers and grilles will have a 75-percent free area. Louvers and grilles shall be fixed in the open position.

M1307.4.2 Mechanical ventilation. Indoor locations intended for hydrogen-generating or refueling operations shall be ventilated in accordance with Section 502.16 of the *International Mechanical Code*. In these locations, *equipment* and *appliances* having an *ignition source* shall be located so that the source of ignition is below the mechanical *ventilation* outlet(s).

M1307.4.3 Specially engineered installations. As an alternative to the provisions of Sections M1307.4.1 and M1307.4.2, the necessary supply of air for *ventilation* and dilution of flammable gases shall be provided by an *approved* engineered system.

M1307.5 Electrical appliances. Electrical *appliances* shall be installed in accordance with Chapters 14, 15, 19, 20 and 34 through 43.

DRAFT

M1411.3.2 Drain pipe materials and sizes. Components of the condensate disposal system shall be ABS, cast iron, copper, cross-linked polyethylene, CPVC, galvanized steel, PE-RT, polyethylene, polypropylene or PVC pipe or tubing. Components shall be selected for the pressure and temperature rating of the installation. Joints and connections shall be made in accordance with the applicable provisions of Chapter 30. Condensate waste and drain line size shall be not less than 3/4-inch (19 mm) nominal diameter from the drain pan connection to the place of condensate disposal. Where the drain pipes from more than one unit are manifolded together for condensate drainage, the pipe or tubing shall be sized in accordance with an *approved* method.

M1411.3.3 Drain line maintenance. Condensate drain lines shall be configured to permit the clearing of blockages and performance of maintenance without requiring the drain line to be cut.

M1411.3.4 Appliances, equipment and insulation in pans. Where *appliances, equipment* or insulation are subject to water damage when auxiliary drain pans fill, those portions of the *appliances, equipment* and insulation shall be installed above the flood level rim of the pan. Supports located inside of the pan to support the *appliance* or *equipment* shall be water resistant and *approved*.

M1411.4 Condensate pumps. Condensate pumps located in uninhabitable spaces, such as attics and crawl spaces, shall be connected to the appliance or equipment served such that when the pump fails, the appliance or equipment will be prevented from operating. Pumps shall be installed in accordance with the manufacturer's instructions.

M1411.5 Auxiliary drain pan. Category IV condensing *appliances* shall have an auxiliary drain pan where damage to any building component will occur as a result of stoppage in the condensate drainage system. These pans shall be installed in accordance with the applicable provisions of Section M1411.3.

Exception: Fuel-fired *appliances* that automatically shut down operation in the event of a stoppage in the condensate drainage system.

M1411.6 Insulation of refrigerant piping. Piping and fittings for refrigerant vapor (suction) lines shall be insulated with insulation having a thermal resistivity of not less than R-4 and having external surface permeance not exceeding 0.05 perm [2.87 ng/(s · m^2 · Pa)] when tested in accordance with ASTM E96.

M1411.7 Location and protection of refrigerant piping. Refrigerant piping installed within 1-1/2 inches (38 mm) of the underside of roof decks shall be protected from damage caused by nails and other fasteners.

M1411.8 Locking access port caps. Refrigerant circuit access ports located outdoors shall be fitted with locking-type tamper-resistant caps or shall be otherwise secured to prevent unauthorized access.

DRAFT

SECTION M1412
ABSORPTION COOLING EQUIPMENT

M1412.1 Approval of equipment. Absorption systems shall be installed in accordance with the manufacturer's instructions. Absorption equipment shall comply with UL 1995 or UL/CSA/ANCE 60335-2-40.

M1412.2 Condensate disposal. Condensate from the cooling coil shall be disposed of as provided in Section M1411.3.

M1412.3 Insulation of piping. Refrigerant piping, brine piping and fittings within a building shall be insulated to prevent condensation from forming on piping.

M1412.4 Pressure-relief protection. Absorption systems shall be protected by a pressure-relief device. Discharge from the pressure-relief device shall be located where it will not create a hazard to persons or property.

SECTION M1413
EVAPORATIVE COOLING EQUIPMENT

[W][S] M1413.1 General. Evaporative cooling equipment and appliances shall comply with UL 1995 or UL/CSA/ANCE 60335-2-40 and shall be installed:

1. In accordance with the manufacturer's instructions.
2. On level platforms in accordance with Section M1305.1.3.1.
3. So that openings in exterior walls are flashed in accordance with Section R703.4.
4. So as to protect the potable water supply in accordance with Section ((~~P2902~~)) 603 of the *Uniform Plumbing Code*.
5. So that air intake opening locations are in accordance with Section R303.5.1.

24 inches (610 mm) shall be maintained between the cooking surface and combustible material and cabinets. The hood width shall be not less than the width of the broiler unit and shall extend over the entire unit.

Exception: Broiler units that incorporate an integral exhaust system, and that are listed and labeled for use without an exhaust hood, or broiler units permanently installed outside the building envelope and having the cooking surface at least 5′0″ below a 1-hour fire resistance rated ceiling, shall not be required to have an exhaust hood.

M1503.3 Exhaust discharge. Domestic cooking exhaust equipment shall discharge to the outdoors through a duct. The duct shall have a smooth interior surface, shall be airtight, shall be equipped with a backdraft damper and shall be independent of all other exhaust systems. Ducts serving domestic cooking exhaust equipment shall not terminate in an attic or crawl space or areas inside the building.

Exception: Where installed in accordance with the manufacturer's instructions, and where mechanical ((~~or natural~~)) *ventilation* is otherwise provided, *listed* and *labeled* ductless range hoods shall not be required to discharge to the outdoors.

M1503.4 Duct material. Ducts serving domestic cooking exhaust equipment shall be constructed of galvanized steel, stainless steel or copper.

Exception: Ducts for domestic kitchen cooking *appliances* equipped with down-draft exhaust systems shall be permitted to be constructed of schedule 40 PVC pipe and fittings provided that the installation complies with all of the following:

1. The duct is installed under a concrete slab poured on grade.
2. The underfloor trench in which the duct is installed is completely backfilled with sand or gravel.
3. The PVC duct extends not more than 1 inch (25 mm) above the indoor concrete floor surface.
4. The PVC duct extends not more than 1 inch (25 mm) above grade *outside of the building.*
5. The PVC ducts are solvent cemented.

M1503.5 Kitchen exhaust rates. Where domestic kitchen cooking *appliances* are equipped with ducted range hoods or down-draft exhaust systems, the fans shall be sized in accordance with Section M1505.5.

M1503.6 Makeup air required. Where one or more gas, liquid or solid fuel-burning appliance that is neither direct-vent nor uses a mechanical draft venting system is located within a dwelling unit's air barrier, each exhaust system capable of exhausting in excess of 400 cubic feet per minute (0.19 m^3/s) shall be mechanically or passively provided with makeup air at a rate approximately equal to the exhaust air rate. Such makeup air systems shall be equipped with not fewer than one damper complying with Section M1503.6.2.

Exception: Makeup air is not required for exhaust systems installed for the exclusive purpose of space cooling and intended to be operated only when windows or other air inlets are open.

M1503.6.1 Location. Kitchen exhaust makeup air shall be discharged into the same room in which the exhaust system is located or into rooms or *duct systems* that communicate through one or more permanent openings with the room in which such exhaust system is located. Such permanent openings shall have a net cross-sectional area not less than the required area of the makeup air supply openings.

DRAFT

TABLE M1504.2
DUCT LENGTH

DUCT TYPE	FLEX DUCT								SMOOTH-WALL DUCT							
Fan airflow rating (CFM @ 0.25 inch wc[a])	50	80	100	125	150	200	250	300	50	80	100	125	150	200	250	300
Diameter[b] (inches)	Maximum length[c, d, e] (feet)															
3	X	X	X	X	X	X	X	X	5	X	X	X	X	X	X	X
4	56	4	X	X	X	X	X	X	114	31	10	X	X	X	X	X
5	NL	81	42	16	2	X	X	X	NL	152	91	51	28	4	X	X
6	NL	NL	158	91	55	18	1	X	NL	NL	NL	168	112	53	25	9
7	NL	NL	NL	NL	161	78	40	19	NL	NL	NL	NL	NL	148	88	54
8 and above	NL	NL	NL	NL	NL	189	111	69	NL	NL	NL	NL	NL	NL	198	133

For SI: 1 inch = 25.4 mm, 1 foot = 304.8 mm.

a. Fan airflow rating shall be in accordance with ANSI/AMCA 210-ANSI/ASHRAE 51.

b. For noncircular ducts, calculate the diameter as four times the cross-sectional area divided by the perimeter.

c. This table assumes that elbows are not used. Fifteen feet of allowable duct length shall be deducted for each elbow installed in the duct run.

d. NL = no limit on duct length of this size.

e. X = not allowed. Any length of duct of this size with assumed turns and fittings will exceed the rated pressure drop.

M1503.6.2 Makeup air dampers. Where makeup air is required by Section M1503.6, makeup air dampers shall comply with this section. Each damper shall be a gravity damper or an electrically operated damper that automatically opens when the exhaust system operates. Dampers shall be located to allow access for inspection, service, repair and replacement without removing permanent construction or any other ducts not connected to the damper being inspected, serviced, repaired or replaced. Gravity or barometric dampers shall not be used in passive makeup air systems except where the dampers are rated to provide the design makeup airflow at a pressure differential of 0.01 in. w.c. (3 Pa) or less.

SECTION M1504
EXHAUST DUCTS AND EXHAUST OPENINGS

M1504.1 Duct construction. Where exhaust duct construction is not specified in this chapter, construction shall comply with Chapter 16.

M1504.2 Duct length. The length of exhaust and supply ducts used with ventilating equipment shall not exceed the lengths determined in accordance with Table M1504.2.

Exception: Duct length shall not be limited where the duct system complies with the manufacturer's design criteria or where the flow rate of the installed ventilating equipment is verified by the installer or approved third party using a flow hood, flow grid or other airflow measuring device.

[W] M1504.3 Exhaust openings. Air exhaust openings shall terminate as follows:

1. Not less than 3 feet (914 mm) from property lines.
2. Not less than 3 feet (914 mm) from gravity air intake openings, operable windows and doors.
3. Not less than 10 feet (3048 mm) from mechanical air intake openings except where either of the following apply:
   3.1 ((~~the~~)) The exhaust opening is located not less than 3 feet (914 mm) above the air intake opening.
   3.2 The exhaust opening is part of a factory-built intake/exhaust combination termination fitting installed in accordance with the manufacturer's instructions, and the exhaust air is drawn from a living space.
4. Openings shall comply with Sections R303.5.2 and R303.6.

DRAFT

SECTION M1505
MECHANICAL VENTILATION

[W] M1505.1 General. ((~~Where local~~)) Local exhaust ((~~or~~)) and whole-house mechanical ventilation ((~~is provided, the~~)) systems and *equipment* shall be designed in accordance with this section.

[W] M1505.2 Recirculation of air. Exhaust air from bathrooms and toilet rooms shall not be recirculated within a residence or ((~~circulated~~)) to another *dwelling unit* and shall be exhausted directly to the outdoors. Exhaust air from bathrooms, toilet rooms and kitchens shall not discharge into an *attic*, crawl space or other areas inside the building. ((~~This section shall not prohibit the installation of ductless range hoods in accordance with the exception to Section M1503.3.~~))

M1505.3 ((~~Exhaust equipment~~)) RESERVED. ((~~Exhaust equipment serving single *dwelling units* shall be *listed* and *labeled* as providing the minimum required airflow in accordance with ANSI/AMCA 210-ANSI/ASHRAE 51.~~))

[W] M1505.4 Whole-house mechanical ventilation system. Whole-house mechanical ventilation systems shall be designed in accordance with Sections M1505.4.1 through ((~~M1505.4.4~~)) M1505.4.2.

[W] M1505.4.1 System design. ((~~The whole-house ventilation system shall consist of one or more supply or exhaust fans, or a combination of such, and associated ducts and controls. Local exhaust or supply fans are permitted to serve as system. Outdoor air ducts connected to the return side of an air handler shall be considered as providing supply ventilation.~~)) Each dwelling unit or guestroom shall be equipped with a ventilation system complying with Section M1505.4.4, M1505.4.5, M1505.4.6 or M1505.4.7. Compliance is also permitted to be demonstrated through compliance with the International Mechanical Code or ASHRAE Standard 62.2.

[W] M1505.4.2 ((~~System controls~~)) Control and operation. ((~~The whole-house mechanical ventilation system shall be provided with controls that enable manual override.~~))

1. Location of controls. Controls for all ventilation systems shall be readily accessible by the occupant.
2. Instructions. Operating instructions for whole-house ventilation systems shall be provided to the occupant by the installer of the system.
3. Local exhaust systems. Local exhaust systems shall be controlled by manual switches, dehumidistats, timers, or other approved means.

4. Continuous whole-house ventilation systems. Continuous whole-house ventilation systems shall operate continuously and be equipped with an override control. A "fan on" switch shall be permitted as an override control. Controls shall be capable of operating the ventilation system without energizing other energy-consuming appliances.
5. Intermittent whole-house ventilation systems. Intermittent whole-house ventilation systems shall comply with the following:
   - 5.1. They shall be capable of operating intermittently and continuously.
   - 5.2. They shall have controls capable of operating the exhaust fans, forced-air system fans, or supply fans without energizing other energy-consuming appliances.
   - 5.3. The ventilation rate shall be adjusted according to the exception in Section 403.8.5.1.
   - 5.4. The system shall be designed so that it can operate automatically based on the type of control timer installed.
   - 5.5. The intermittent mechanical ventilation system shall operate at least one hour out of every four.
   - 5.6. The system shall have a manual control and automatic control, such as a 24-hour clock timer.
   - 5.7. At the time of final inspection, the automatic control shall be set to operate the whole-house fan according to the schedule used to calculate the whole-house fan sizing.
   - 5.8. A label shall be affixed to the control that reads "Whole House Ventilation (see operating instructions)."

[W] M1505.4.2.1 Operating instructions. Installers shall provide the manufacturer's installation, operating instructions, and a whole-house ventilation system operation description.

[W] M1505.4.3 Mechanical ventilation rate. The whole-house mechanical ventilation system shall provide outdoor air to each *dwelling unit* at a continuous rate ((~~as~~)) of not less than that determined in accordance with Table M1505.4.3(1). ((~~or Equation 15-1.~~

~~Ventilation rate in cubic feet per minute = (0.01 × total square foot area of house) + [7.5 × (number of bedrooms + 1)]~~

~~**Equation 15-1**~~))

Exception: The whole-house mechanical ventilation system is permitted to operate intermittently where the system has controls that enable operation for not less than 25 percent of each 4-hour segment and the ventilation rate prescribed in Table M1505.4.3(1) is multiplied by the factor determined in accordance with Table M1505.4.3(2).

DRAFT

TABLE M1505.4.3(1)
CONTINUOUS WHOLE-HOUSE MECHANICAL VENTILATION SYSTEM AIRFLOW RATE REQUIREMENTS

DWELLING UNIT FLOOR AREA (square feet)	NUMBER OF BEDROOMS				
	0 – 1	2 – 3	4 – 5	6 – 7	> 7
	Airflow in CFM				
< 1,500	30	45	60	75	90
1,501 – 3,000	45	60	75	90	105
3,001 – 4,500	60	75	90	105	120
4,501 – 6,000	75	90	105	120	135
6,001 – 7,500	90	105	120	135	150
> 7,500	105	120	135	150	165

For SI: 1 square foot = 0.0929 m^2, 1 cubic foot per minute = 0.0004719 m^3/s.

TABLE M1505.4.3(2)
INTERMITTENT WHOLE-HOUSE MECHANICAL VENTILATION RATE FACTORS[a, b]

RUN-TIME PERCENTAGE IN EACH 4-HOUR SEGMENT	25%	33%	50%	66%	75%	100%
Factor[a]	4	3	2	1.5	1.3	1.0

a. For ventilation system run time values between those given, the factors are permitted to be determined by interpolation.
b. Extrapolation beyond the table is prohibited.

[W] M1505.4.4 Whole-house ventilation using exhaust fans. This section establishes minimum prescriptive requirements for whole-house ventilation systems using exhaust fans. A system which meets all the requirements of this section shall be deemed to satisfy the requirements for a whole-house ventilation system.

[W] M1505.4.4.1 Whole-house ventilation fans. Exhaust fans providing whole-house ventilation shall have a flow rating at 0.25 inches water gauge as specified in Table M1505.4.3(1). Manufacturers' fan flow ratings shall be determined according to HVI 916 or AMCA 210.

[W] M1505.4.4.2 Fan noise. Whole-house fans located 4 feet or less from the interior grille shall have a sone rating of 1.0 or less measured at 0.1 inches water gauge. Manufacturer's noise ratings shall be determined as per HVI 915 (March 2009). Remotely mounted fans shall be acoustically isolated from the structural elements of the building and from attached duct work using insulated flexible duct or other approved material.

[W] M1505.4.4.3 Fan controls. The whole-house ventilation fan shall meet the requirements of Section M1505.4.2 and M1505.3.2.1.

[W] M1505.4.4.4 Ventilation openings. Each habitable space shall be provided with outdoor air inlets or operable windows with an openable area not less than 4 square inches of net free area of opening for each 10 cfm of outdoor air required by Table M1505.4.3(1). Where outdoor air supplies are separated from exhaust points by doors, provisions shall be made to ensure air flow by installation of distribution ducts, undercutting doors, installation of grilles, transoms, or similar means. Doors shall be undercut to a minimum of 1/2 inch above the surface of the finish floor covering.

Individual room outdoor air inlets shall:

1. Have controllable and secure openings;
2. Be sleeved or otherwise designed so as not to compromise the thermal properties of the wall or window in which they are placed;
3. Any inlet or combination of inlets which provide 10 cfm at 10 Pascals are deemed equivalent to 4 square inches net free area.

Ventilation opening shall be screened or otherwise protected from entry by leaves or other material. Openings shall be controllable, securable and shall be designed to not compromise the thermal properties of the building envelope. Ventilation openings shall be located so as not to take air from the following areas:

1. Closer than 10 feet from an appliance vent outlet, unless such vent outlet is 3 feet above the outdoor air inlet.
2. Where it will pick up objectionable odors, fumes or flammable vapors.
3. A hazardous or unsanitary location.
4. A room or space having any fuel-burning appliances therein.
5. Closer than 10 feet from a vent opening of a plumbing drainage system unless the vent opening is at least 3 feet above the air inlet.
6. Attic, crawl spaces, or garages.
7. Asphalt roofs unless it is shown that no other location is permissible. In such cases the inlet opening shall be located a minimum of 2 feet from the nearest surface of the asphalt roofing, measured from the intake opening.

[W] M1505.4.5 Whole-house ventilation integrated with a forced-air system. This section establishes minimum prescriptive requirements for whole-house ventilation systems integrated with forced-air ventilation systems. A system which meets all the requirements of this section shall be deemed to satisfy the requirements for a whole-house ventilation system.

[W] M1505.4.5.1 Integrated whole-house ventilation systems. Integrated whole-house ventilation systems shall provide outdoor air at the rate calculated using Section M1505.4.3. Integrated forced-air ventilation systems shall distribute outdoor air to each habitable space through the forced-air system ducts. Integrated forced-air ventilation systems shall have an outdoor air inlet duct connecting a terminal element on the outside of the building to the return air plenum of the forced-air system, at a point within 4 feet upstream of the air handler. The outdoor air inlet duct connection to the return air stream shall be located upstream of the forced-air system blower and shall not be connected directly into a furnace cabinet to prevent thermal shock to the heat exchanger. The system will be equipped with a motorized damper connected to the automatic ventilation control as specified in Section M1505.4.2. The required flow rate shall be verified by field testing with a flow hood or a flow measuring station.

[W] M1505.4.5.2 Ventilation duct insulation. All supply ducts in the conditioned space shall be insulated to a minimum of R-4.

[W] M1505.4.5.3 Outdoor air inlets. Inlets shall be screened or otherwise protected from entry by leaves or other material. Outdoor air inlets shall be located so as not to take air from the following areas:

1. Closer than 10 feet from an appliance vent outlet, unless such vent outlet is 3 feet above the outdoor air inlet.
2. Where it will pick up objectionable odors, fumes or flammable vapors.
3. A hazardous or unsanitary location.
4. A room or space having any fuel-burning appliances therein.
5. Closer than 10 feet from a vent opening of a plumbing drainage system unless the vent opening is at least 3 feet above the air inlet.
6. Attic, crawl spaces, or garages.

DRAFT

[W] M1505.4.6 Whole-house ventilation using a supply fan. This section establishes minimum prescriptive requirements for whole-house ventilation systems using an inline supply fan. A system which meets all the requirements of this section shall be deemed to satisfy the requirements for a whole-house ventilation system.

[W] M1505.4.6.1 Outdoor air. Supply fan ventilation systems shall distribute outdoor air to each habitable space through the forced-air system ducts or through dedicated ducts to each habitable space. Supply fans shall have the capacity to provide the amount of outdoor air specified in Table M1505.4.3(1) at 0.40 inches water gauge as per HVI 916. The outdoor air must be filtered before it is delivered to habitable spaces. The filter may be located at the intake device, in line with the fan, or, in the case of a connection to the return plenum of the air handler, using the furnace filter. An outdoor air inlet shall be connected to either the supply or return air stream.

[W] M1505.4.6.2 Ducts. An outdoor air inlet duct connection to the supply air stream shall be located downstream of the forced-air system blower. An outdoor air inlet duct connection to the return air stream shall be located at least 4 feet upstream of the forced-air system blower and its filter. Neither type of duct shall be connected directly into a furnace cabinet to prevent thermal shock to the heat exchanger. The outdoor air inlet duct shall be prescriptively sized in accordance with Table M1505.4.6.2. The terminal element on the outside of the building shall be sized 2 inches in diameter larger than the outdoor air inlet duct.

[W] TABLE M1505.4.6.2
Prescriptive Supply Fan Duct Sizing

SUPPLY FAN TESTED CFM AT 0.40" wg		
Specified Volume from Table M1507.3.3(1)	Minimum Smooth Duct Diameter	Minimum Flexible Duct Diameter
50 – 90 cfm	4 inch	5 inch
90 – 150 cfm	5 inch	6 inch
150 – 250 cfm	6 inch	7 inch
250 – 400 cfm	7 inch	8 inch

[W] M1505.4.6.3 Dampers. The system shall be equipped with a backdraft damper and one of the following:

1. A calibrated manual volume damper installed and set to meet the measured flow rates specified in Table M1505.4.3(1) by field testing with a pressure gauge and/or following manufacturer's installation instructions; or
2. A manual volume damper installed and set to meet the measured flow rates specified in Table M1505.4.3(1) by field testing with a flow hood or a flow measuring station; or
3. An automatic flow-regulating device sized to the specified flow rates in Table M1505.4.3(1) which provides constant flow over a pressure range of 0.20 to 0.60 inches water gauge.

[W] M1505.4.6.4 Ventilation duct insulation. All supply ducts in the conditioned space shall be insulated to a minimum of R-4.

[W] M1505.4.6.5 Outdoor air inlets. Inlets shall be screened or otherwise protected from entry by leaves or other material. Outdoor air inlets shall be located so as not to take air from the following areas:

1. Closer than 10 feet from an appliance vent outlet, unless such vent outlet is 3 feet above the outdoor air inlet.
2. Where it will pick up objectionable odors, fumes or flammable vapors.
3. A hazardous or unsanitary location.
4. A room or space having any fuel-burning appliances therein.
5. Closer than 10 feet from a vent opening of a plumbing drainage system unless the vent opening is at least 3 feet above the air inlet.
6. Attic, crawl spaces, or garages.

[W] M1505.4.7 Whole-house ventilation using a heat recovery ventilation system. This section establishes minimum prescriptive requirements for whole-house ventilation using a heat recovery ventilation system.

[W] M1505.4.7.1 Heat recovery ventilation systems. All duct work in heat recovery systems shall be sized and installed per the manufacturer's instructions. System minimum flow rating shall be not less than that specified in Table M1505.4.3(1). Heat recovery ventilation systems shall have a filter on the upstream side of the heat exchanger in both the intake and exhaust airstreams with a minimum efficiency rating value (MERV) of 6.

[W] M1505.4.7.2 Ventilation duct insulation. All supply ducts in the conditioned space installed upstream of the heat exchanger shall be insulated to a minimum of R-4.

DRAFT

[W] M1505.4.7.3 Outdoor air inlets. Inlets shall be screened or otherwise protected from entry by leaves or other material. Outdoor air inlets shall be located so as not to take air from the following areas:

1. Closer than 10 feet from an appliance vent outlet, unless such vent outlet is 3 feet above the outdoor air inlet.
2. Where it will pick up objectionable odors, fumes or flammable vapors.
3. A hazardous or unsanitary location.
4. A room or space having any fuel-burning appliances therein.
5. Closer than 10 feet from a vent opening of a plumbing drainage system unless the vent opening is at least 3 feet above the air inlet.
6. Attic, crawl spaces, or garages.

[W] M1505.5 Local exhaust. Local exhaust shall be provided in each kitchen, bathroom, water closet, laundry room, indoor swimming pool, spa, and other rooms where water vapor or cooking odor is produced. Local exhaust systems shall be designed to have the capacity to exhaust the minimum air flow rate determined in accordance with Table M1505.5.

[W] M1505.5.1 Local exhaust fans. Exhaust fans providing local exhaust shall have a minimum fan flow rating not less than 50 cfm at 0.25 inches water gauge for bathrooms, laundries, or similar rooms and 100 cfm at 0.25 inches water gauge for kitchens. Manufacturers' fan flow ratings shall be determined as per HVI 916 (April 1995) or AMCA 210.

EXCEPTION: Where a range hood or down draft exhaust fan is used to satisfy the local exhaust requirements for kitchens, the range hood or down draft exhaust shall not be less than 100 cfm at 0.10 inches water gauge.

[W] M1505.5.2 Local exhaust controls. Local exhaust systems shall be controlled by manual switches, dehumidistats, timers, or other *approved* means. Local exhaust system controls shall be *readily accessible*.

[W] ((~~M1505.4.4~~)) 1505.5.2 Local exhaust ((~~rates~~)) controls. Local exhaust systems shall be ((~~designed~~)) controlled ((~~to have the capacity to exhaust the minimum airflow rate determined in accordance with Table M1505.4.4~~)) by manual switches, dehumidistats, timers, or other *approved* means. Local exhaust system controls shall be *readily accessible*.

[W] TABLE M1505.5
MINIMUM REQUIRED LOCAL EXHAUST RATES FOR ONE- AND TWO-FAMILY DWELLINGS

AREA TO BE EXHAUSTED	EXHAUST RATES
Kitchens	100 cfm intermittent or 25 cfm continuous
Bathrooms - Toilet Rooms Laundry rooms, indoor swimming pools, and spas	Mechanical exhaust capacity of 50 cfm intermittent or 20 cfm continuous

For SI: 1 cubic foot per minute = 0.0004719 m^3/s.

DRAFT

CHAPTER 16

DUCT SYSTEMS

User notes:

About this chapter: *Chapter 16 addresses duct construction for HVAC and most exhaust systems. This chapter covers duct materials, duct construction, duct installation, duct insulation properties, duct sealing, above-ground and underground ducts, return air intake locations and air plenums.*

Code development reminder: *Code change proposals to this chapter will be considered by the IRC—Plumbing/Mechanical Code Development Committee during the 2018 (Group A) Code Development Cycle. See explanation on page iv.*

SECTION M1601
DUCT CONSTRUCTION

M1601.1 Duct design. *Duct systems* serving heating, cooling and *ventilation equipment* shall be installed in accordance with the provisions of this section and ACCA Manual D, the appliance manufacturer's installation instructions or other *approved* methods.

[W] M1601.1.1 Above-ground duct systems. Above-ground *duct systems* shall conform to the following:

1. *Equipment* connected to *duct systems* shall be designed to limit discharge air temperature to not greater than 250°F (121°C).
2. Factory-made ducts shall be listed and labeled in accordance with UL 181 and installed in accordance with the manufacturer's instructions.
3. Fibrous glass duct construction shall conform to the SMACNA *Fibrous Glass Duct Construction Standards* or NAIMA *Fibrous Glass Duct Construction Standards.*
4. Field-fabricated and shop-fabricated metal and flexible duct constructions shall conform to the SMACNA HVAC *Duct Construction Standards—Metal and Flexible* except as allowed by Table M1601.1.1. Galvanized steel shall conform to ASTM A653.
5. The use of gypsum products to construct return air ducts or plenums is permitted, provided that the air temperature does not exceed 125°F (52°C) and exposed surfaces are not subject to condensation.
6. *Duct systems* shall be constructed of materials having a flame spread index of not greater than 200.
7. Stud wall cavities and the spaces between solid floor joists <u>shall not be used as a duct or an air plenum in new construction. For existing systems, stud wall cavities and the spaces between solid floor joists</u> to be used as air plenums shall comply with the following conditions:
   - 7.1. These cavities or spaces shall not be used as a plenum for supply air.
   - 7.2. These cavities or spaces shall not be part of a required fire-resistance-rated assembly.
   - 7.3. Stud wall cavities shall not convey air from more than one floor level.
   - 7.4. Stud wall cavities and joist-space plenums shall be isolated from adjacent concealed spaces by tight-fitting fireblocking in accordance with Section R602.8.
   - 7.5. Stud wall cavities in the outside walls of building envelope assemblies shall not be utilized as air plenums.
8. Volume dampers, equipment and other means of supply, return and exhaust air adjustment used in system balancing shall be provided with access.

M1601.1.2 Underground duct systems. Underground *duct systems* shall be constructed of *approved* concrete, clay, metal or plastic. The maximum design temperature for systems utilizing plastic duct and fittings shall be 150°F (66°C). Metal ducts shall be protected from corrosion in an *approved* manner or shall be completely encased in concrete not less than 2 inches (51 mm) thick. Nonmetallic ducts shall be installed in accordance with the manufacturer's instructions. Plastic pipe and fitting materials shall conform to cell classification 12454-B of ASTM D1248 or ASTM D1784 and external loading properties of ASTM D2412. Ducts shall slope to a drainage point that has access. Ducts shall be sealed, secured and tested prior to encasing the ducts in concrete or direct burial. Duct tightness shall be verified as required by Section N1103.3. Metallic ducts having an *approved* protective coating and nonmetallic ducts shall be installed in accordance with the manufacturer's instructions.

DRAFT

CHAPTER 17

COMBUSTION AIR

User notes:

About this chapter: *Chapter 17 applies only to oil-fired and solid fuel-fired appliances. Chapter 24 applies to combustion air for gas-fired appliances.*

Code development reminder: *Code change proposals to this chapter will be considered by the IRC—Plumbing/Mechanical Code Development Committee during the 2018 (Group A) Code Development Cycle. See explanation on page iv.*

SECTION M1701
GENERAL

[W] M1701.1 Scope. Solid fuel-burning *appliances* shall be provided with *combustion air* in accordance with the *appliance* manufacturer's installation instructions. Oil-fired *appliances* shall be provided with *combustion air* in accordance with NFPA 31. The methods of providing *combustion air* in this chapter do not apply to fireplaces, fireplace stoves and direct-vent *appliances*. The requirements for combustion and dilution air for gas-fired *appliances* shall be in accordance with Chapter 24.

Fireplaces shall comply with Chapter 10.

M1701.2 Opening location. In flood hazard areas as established in Table R301.2(1), *combustion air* openings shall be located at or above the elevation required in Section R322.2.1 or R322.3.2.

DRAFT

CHAPTER 20

BOILERS AND WATER HEATERS

User notes:

About this chapter: *Chapter 20 is specific to boilers and waters heaters. The provisions of this chapter apply to appliances generally without regard to the energy source. Gas-fired boilers and water heaters are also addressed in Chapter 24; therefore, Chapters 20 and 24 both apply to such appliances.*

Code development reminder: *Code change proposals to this chapter will be considered by the IRC—Plumbing/Mechanical Code Development Committee during the 2018 (Group A) Code Development Cycle. See explanation on page iv.*

SECTION M2001
BOILERS

((~~**M2001.1 Installation.** In addition to the requirements of this code, the installation of boilers shall conform to the manufacturer's instructions. The manufacturer's rating data, the nameplate and operating instructions of a permanent type shall be attached to the boiler. Boilers shall have their controls set, adjusted and tested by the installer. A complete control diagram together with complete boiler operating instructions shall be furnished by the installer. Solid and liquid fuel-burning boilers shall be provided with *combustion air* as required by Chapter 17.~~

~~**M2001.1.1 Standards.** Packaged oil-fired boilers shall be *listed* and *labeled* in accordance with UL 726. Packaged electric boilers shall be *listed* and *labeled* in accordance with UL 834. Solid fuel-fired boilers shall be *listed* and *labeled* in accordance with UL 2523. Boilers shall be designed, constructed and certified in accordance with the ASME *Boiler and Pressure Vessel Code*, Section I or IV. Controls and safety devices for boilers with fuel input ratings of 12,500,000 Btu/hr (3663 kW) or less shall meet the requirements of ASME CSD-1. Gas-fired boilers shall conform to the requirements listed in Chapter 24.~~))

M2001.1 Boilers. Boilers shall comply with the *Seattle Boiler and Pressure Vessel Code*.

((~~**M2001.2 Clearance.** Boilers shall be installed in accordance with their *listing* and *label*.~~

~~**M2001.3 Valves.** Every boiler or modular boiler shall have a shutoff valve in the supply and return piping. For multiple boiler or multiple modular boiler installations, each boiler or modular boiler shall have individual shutoff valves in the supply and return piping.~~

~~**Exception:** Shutoff valves are not required in a system having a single low-pressure steam boiler.~~

~~**M2001.4 Flood-resistant installation.** In flood hazard areas established in Table R301.2(1), boilers, water heaters and their control systems shall be located or installed in accordance with Section R322.1.6.~~

~~SECTION M2002~~
~~OPERATING AND SAFETY CONTROLS~~

~~**M2002.1 Safety controls.** Electrical and mechanical operating and safety controls for boilers shall be *listed* and *labeled*.~~

~~**M2002.2 Hot water boiler gauges.** Every hot water boiler shall have a pressure gauge and a temperature gauge, or combination pressure and temperature gauge. The gauges shall indicate the temperature and pressure within the normal range of the system's operation.~~

~~**M2002.3 Steam boiler gauges.** Every steam boiler shall have a water-gauge glass and a pressure gauge. The pressure gauge shall indicate the pressure within the normal range of the system's operation. The gauge glass shall be installed so that the mid-point is at the normal water level.~~

~~**M2002.4 Pressure relief valve.** Boilers shall be equipped with pressure relief valves with minimum rated capacities for the *equipment* served. Pressure relief valves shall be set at the maximum rating of the boiler. Discharge shall be piped to drains by gravity to within 18 inches (457 mm) of the floor or to an open receptor.~~

~~**M2002.5 Boiler low-water cutoff.** Steam and hot water boilers shall be protected with a low-water cutoff control.~~

~~**Exception:** A low-water cutoff is not required for coil-type and water-tube-type boilers that require forced circulation of water through the boiler and that are protected with a flow-sensing control.~~

~~**M2002.6 Operation.** Low-water cutoff controls and flow-sensing controls required by Section M2002.5 shall automatically stop the combustion operation of the appliance when the water level drops below the lowest safe water level as established by the manufacturer or when the water circulation flow is less than that required for safe operation of the appliance, respectively.~~

DRAFT

~~SECTION M2003~~
~~EXPANSION TANKS~~

~~**M2003.1 General.** Hot water boilers shall be provided with expansion tanks. Nonpressurized expansion tanks shall be securely fastened to the structure or boiler and supported to carry twice the weight of the tank filled with water. Provisions shall be made for draining nonpressurized tanks without emptying the system.~~

~~**M2003.1.1 Pressurized expansion tanks.** Pressurized expansion tanks shall be consistent with the volume and capacity of the system. Tanks shall be capable of withstanding a hydrostatic test pressure of two and one-half times the allowable working pressure of the system.~~

~~**M2003.2 Minimum capacity.** The minimum capacity of expansion tanks shall be determined from Table M2003.2.~~

~~**TABLE M2003.2**~~
~~**EXPANSION TANK MINIMUM CAPACITY[a] FOR FORCED HOT WATER SYSTEMS**~~

~~SYSTEM VOLUME[b] (gallons)~~	~~PRESSURIZED DIAPHRAGM TYPE~~	~~NONPRESSURIZED TYPE~~
~~10~~	~~1.0~~	~~1.5~~
~~20~~	~~1.5~~	~~3.0~~
~~30~~	~~2.5~~	~~4.5~~
~~40~~	~~3.0~~	~~6.0~~
~~50~~	~~4.0~~	~~7.5~~
~~60~~	~~5.0~~	~~9.0~~
~~70~~	~~6.0~~	~~10.5~~
~~80~~	~~6.5~~	~~12.0~~
~~90~~	~~7.5~~	~~13.5~~
~~100~~	~~8.0~~	~~15.0~~

~~For SI: 1 gallon = 3.785 L, 1 pound per square inch gauge = 6.895 kPa, °C = [(°F) 32]/1.8.~~

~~a. Based on average water temperature of 195°F, fill pressure of 12 psig and an operating pressure of not greater than 30 psig.~~

~~b. System volume includes volume of water in boiler, convectors and piping, not including the expansion tank.~~))

DRAFT

SECTION M2004
WATER HEATERS USED FOR SPACE HEATING

M2004.1 General. Water heaters used to supply both potable hot water and hot water for space heating shall be installed in accordance with this chapter, Chapter 24, Chapter 28 and the manufacturer's instructions.

SECTION M2005
WATER HEATERS

[W] M2005.1 General. Water heaters shall be installed in accordance with Chapter ((~~28~~)) 5 of the *Uniform Plumbing Code*, the manufacturer's instructions and the requirements of this code. Water heaters installed in an attic shall comply with the requirements of Section M1305.1.2. Gas-fired water heaters shall comply with the requirements in Chapter 24. Domestic electric water heaters shall comply with UL 174. Oiled-fired water heaters shall comply with UL 732. Solar thermal water heating systems shall comply with Chapter 23 and SRCC 300. Solid fuel-fired water heaters shall comply with UL 2523.

M2005.2 Prohibited locations. Fuel-fired water heaters shall not be installed in a room used as a storage closet. Water heaters located in a bedroom or bathroom shall be installed in a sealed enclosure so that *combustion air* will not be taken from the living space. Installation of direct-vent water heaters within an enclosure is not required.

M2005.2.1 Water heater access. Access to water heaters that are located in an *attic* or underfloor crawl space is permitted to be through a closet located in a sleeping room or bathroom where *ventilation* of those spaces is in accordance with this code.

M2005.3 Electric water heaters. Electric water heaters shall be installed in accordance with the applicable provisions of Chapters 34 through 43.

M2005.4 Supplemental water-heating devices. Potable water-heating devices that use refrigerant-to-water heat exchangers shall be *approved* and installed in accordance with the manufacturer's instructions.

M2101.2 System drain down. Hydronic piping systems shall be installed to permit draining of the system. Where the system drains to the plumbing drainage system, the installation shall conform to the requirements of Chapters 25 through 32 of this code.

Exception: The buried portions of systems embedded underground or under floors.

[S] M2101.3 Protection of potable water. The potable water system shall be protected from backflow in accordance with the provisions listed in Section ((~~P2902~~)) 603 of the *Uniform Plumbing Code*.

M2101.4 Pipe penetrations. Openings through concrete or masonry building elements shall be sleeved.

M2101.5 Contact with building material. A hydronic piping system shall not be in direct contact with any building material that causes the piping material to degrade or corrode.

M2101.6 Drilling and notching. Wood-framed structural members shall be drilled, notched or altered in accordance with the provisions of Sections R502.8, R602.6, R602.6.1 and R802.7. Holes in load-bearing members of cold-formed steel light-frame construction shall be permitted only in accordance with Sections R505.2.6, R603.2.6 and R804.2.6. In accordance with the provisions of Sections R505.3.5, R603.3.4 and R804.3.3, cutting and notching of flanges and lips of load-bearing members of cold-formed steel light-frame construction shall not be permitted. Structural insulated panels (SIPs) shall be drilled and notched or altered in accordance with the provisions of Section R610.7.

[W] ((~~M2101.7 Prohibited tee applications.~~ ~~Fluid in the supply side of a hydronic system shall not enter a tee fitting through the branch opening.~~))

M2101.8 Expansion, contraction and settlement. Piping shall be installed so that piping, connections and *equipment* shall not be subjected to excessive strains or stresses. Provisions shall be made to compensate for expansion, contraction, shrinkage and structural settlement.

M2101.9 Piping support. Hangers and supports shall be of material of sufficient strength to support the piping, and shall be fabricated from materials compatible with the piping material. Piping shall be supported at intervals not exceeding the spacing specified in Table M2101.9.

TABLE M2101.9
HANGER SPACING INTERVALS

PIPING MATERIAL	MAXIMUM HORIZONTAL SPACING (feet)	MAXIMUM VERTICAL SPACING (feet)
ABS	4	10[a]
CPVC ≤ 1-inch pipe or tubing	3	5[a]
CPVC ≥ 1-1/4 inches	4	10[a]
Copper or copper-alloy pipe	12	10
Copper or copper-alloy tubing	6	10
PB pipe or tubing	2.67	4
PE pipe or tubing	2.67	4
PE-RT ≤ 1 inch	2.67	10[a]
PE-RT ≥ 1-1/4 inches	4	10[a]
PEX tubing ≤ 1 inch	2.67	4
PEX tubing ≥ 1-1/4 inches	4	10[a]
PP < 1-inch pipe or tubing	2.67	4
PP > 1-1/4 inches	4	10[a]
PVC	4	10[a]
Steel pipe	12	15
Steel tubing	8	10

For SI: 1 inch = 25.4 mm, 1 foot = 304.8 mm.

a. For sizes 2 inches and smaller, a guide shall be installed midway between required vertical supports. Such guides shall prevent pipe movement in a direction perpendicular to the axis of the pipe.

M2101.10 Tests. Hydronic piping systems shall be tested hydrostatically at a pressure of one and one-half times the maximum system design pressure, but not less than 100 pounds per square inch (689 kPa). The duration of each test shall be not less than 15 minutes.

Exception: For PEX piping systems, testing with a compressed gas shall be an alternative to hydrostatic testing where compressed air or other gas pressure testing is specifically authorized by all of the manufacturers' instructions for the PEX pipe

DRAFT

and fittings products installed at the time the system is being tested, and compressed air or other gas testing is not otherwise prohibited by applicable codes, laws, or regulations outside of this code.

SECTION M2102
BASEBOARD CONVECTORS

M2102.1 General. Baseboard convectors shall be installed in accordance with the manufacturer's instructions. Convectors shall be supported independently of the hydronic piping.

SECTION M2103
FLOOR HEATING SYSTEMS

M2103.1 Piping materials. Piping for embedment in concrete or gypsum materials shall be standard-weight steel pipe, copper and copper-alloy pipe and tubing, cross-linked polyethylene/aluminum/cross-linked polyethylene (PEX-AL-PEX) pressure pipe, chlorinated polyvinyl chloride (CPVC), polybutylene, cross-linked polyethylene (PEX) tubing, polyethylene of raised temperature (PE-RT) or polypropylene (PP) with a rating of not less than 100 psi at 180°F (690 kPa at 82°C).

M2103.2 Thermal barrier required. Radiant floor heating systems shall have a thermal barrier in accordance with Sections M2103.2.1 and M2103.2.2. Insulation *R*-values for slab-on-grade and suspended floor installations shall be in accordance with Chapter 11.

Exception: Insulation shall not be required in engineered systems where it can be demonstrated that the insulation will decrease the efficiency or have a negative effect on the installation.

M2103.2.1 Thermal break required. A thermal break consisting of asphalt expansion joint materials or similar insulating materials shall be provided at a point where a heated slab meets a foundation wall or other conductive slab.

M2103.2.2 Thermal barrier material marking. Insulating materials used in thermal barriers shall be installed so that the manufacturer's *R*-value mark *is readily observable upon inspection.*

[W][S] M2103.3 Piping joints. Copper and copper-alloy systems shall be soldered, brazed, or press connected. Soldering shall be in accordance with ASTM B828. Fluxes for soldering shall be in accordance with ASTM B813. Brazing fluxes shall be in accordance with AWS A5.31. Press-connect joints shall be in accordance with ASME B16.51. Piping joints that are embedded shall be installed in accordance with the following requirements:

1. Steel pipe joints shall be welded.
2. Copper tubing shall be joined by brazing complying with Section ((~~P3003.6.1~~)) 605.3.1 of the *Uniform Plumbing Code*.
3. Polybutylene pipe and tubing joints shall be installed with socket-type heat-fused polybutylene fittings.
4. CPVC tubing shall be joined using solvent cement joints.
5. Polypropylene pipe and tubing joints shall be installed with socket-type heat-fused polypropylene fittings.
6. Cross-linked polyethylene (PEX) tubing shall be joined using cold expansion, insert or compression fittings.
7. Raised temperature polyethylene (PE-RT) tubing shall be joined using insert or compression fittings.

M2103.4 Testing. Piping or tubing to be embedded shall be tested by applying a hydrostatic pressure of not less than 100 psi (690 kPa). The pressure shall be maintained for 30 minutes, during which the joints shall be visually inspected for leaks.

SECTION M2104
LOW TEMPERATURE PIPING

M2104.1 Piping materials. Low temperature piping for embedment in concrete or gypsum materials shall be as indicated in Table M2101.1.

M2104.2 Piping joints. Piping joints that are embedded, other than those in Section M2103.3, shall comply with the following requirements:

1. Cross-linked polyethylene (PEX) tubing shall be installed in accordance with the manufacturer's instructions.
2. Polyethylene tubing shall be installed with heat-fusion joints.
3. Polypropylene (PP) tubing shall be installed in accordance with the manufacturer's instructions.
4. Raised temperature polyethylene (PE-RT) shall be installed in accordance with the manufacturer's instructions.

M2104.3 Raised temperature polyethylene (PE-RT) plastic tubing. Joints between raised temperature polyethylene tubing and fittings shall conform to Sections M2104.3.1 through M2104.3.3. Mechanical joints shall be installed in accordance with the manufacturer's instructions.

DRAFT

TABLE M2105.5
GROUND-SOURCE LOOP PIPE FITTINGS

PIPE MATERIAL	STANDARD
Chlorinated polyvinyl chloride (CPVC)	ASTM D2846; ASTM F437; ASTM F438; ASTM F439; ASTM F1970; CSA B137.6
Cross-linked polyethylene (PEX)	ASTM F877; ASTM F1807; ASTM F1960; ASTM F2080; ASTM F2159; ASTM F2434; CSA B137.5
High-density polyethylene (HDPE)	ASTM D2683; ASTM D3261; ASTM F1055; CSA B137.1; CSA C448; NSF 358-1
Polyethylene/aluminum/polyethylene (PE-AL-PE)	ASTM F1282; ASTM F2434; CSA B137.9
Polypropylene (PP-R)	ASTM F2389; CSA B137.11; NSF 358-2
Polyvinyl chloride (PVC)	ASTM D2464; ASTM D2466; ASTM D2467; ASTM F1970, CSA B137.2; CSA B137.3
Raised temperature polyethylene (PE-RT)	ASTM D2683; ASTM D3261; ASTM F1055; ASTM F1807; ASTM F2098; ASTM F2159; ASTM F2735; ASTM F2769; CSA B137.1; CSA B137.18

M2105.6 Joints and connections. Joints and connections shall be of an approved type. Joints and connections shall be tight for the pressure of the ground-source loop system. Joints used underground shall be approved for such applications.

M2105.6.1 Joints between different piping materials. Joints between different piping materials shall be made with approved transition fittings.

M2105.7 Preparation of pipe ends. Pipe shall be cut square, reamed, and shall be free of burrs and obstructions. CPVC, PE and PVC pipe shall be chamfered. Pipe ends shall have full-bore openings and shall not be undercut.

M2105.8 Joint preparation and installation. Where required by Sections M2105.9 through M2105.11, the preparation and installation of mechanical and thermoplastic-welded joints shall comply with Sections M2105.8.1 and M2105.8.2.

M2105.8.1 Mechanical joints. Mechanical joints shall be installed in accordance with the manufacturer's instructions.

M2105.8.2 Thermoplastic-welded joints. Joint surfaces for thermoplastic-welded joints shall be cleaned by an approved procedure. Joints shall be welded in accordance with the manufacturer's instructions.

[W][S] M2105.9 CPVC plastic pipe. Joints between CPVC plastic pipe or fittings shall be solvent-cemented in accordance with Section ((~~P2906.9.1.2~~)) 605.2.2 of the *Uniform Plumbing Code*. Threaded joints between fittings and CPVC plastic pipe shall be in accordance with Section M2105.9.1.

M2105.9.1 Threaded joints. Threads shall conform to ASME B1.20.1. The pipe shall be Schedule 80 or heavier plastic pipe and shall be threaded with dies specifically designed for plastic pipe. Thread lubricant, pipe-joint compound or tape shall be applied on the male threads only and shall be approved for application on the piping material.

M2105.10 Cross-linked polyethylene (PEX) plastic tubing. Joints between cross-linked polyethylene plastic tubing and fittings shall comply with Sections M2105.10.1 and M2105.10.2. Mechanical joints shall comply with Section M2105.8.1.

M2105.10.1 Compression-type fittings. Where compression-type fittings include inserts and ferrules or O-rings, the fittings shall be installed without omitting the inserts and ferrules or O-rings.

M2105.10.2 Plastic-to-metal connections. Solder joints in a metal pipe shall not occur within 18 inches (457 mm) of a transition from such metal pipe to plastic pipe or tubing.

M2105.11 Polyethylene plastic pipe and tubing. Joints between polyethylene plastic pipe and tubing or fittings for ground-source heat-pump loop systems shall be heat-fusion joints complying with Section M2105.11.1, electrofusion joints complying with Section M2105.11.2, or stab-type insertion joints complying with Section M2105.11.3.

M2105.11.1 Heat-fusion joints. Joints shall be of the socket-fusion, saddle-fusion or butt-fusion type, and joined in accordance with ASTM D2657. Joint surfaces shall be clean and free from moisture. Joint surfaces shall be heated to melt temperatures and joined. The joint shall remain undisturbed until cool. Fittings shall be manufactured in accordance with ASTM D2683 or ASTM D3261.

M2105.11.2 Electrofusion joints. Joints shall be of the electrofusion type. Joint surfaces shall be clean and free from moisture, and scoured to expose virgin resin. Joint surfaces shall be heated to melt temperatures for the period of time specified by the manufacturer. The joint shall remain undisturbed until cool. Fittings shall be manufactured in accordance with ASTM F1055.

M2105.11.3 Stab-type insert fittings. Joint surfaces shall be clean and free from moisture. Pipe ends shall be chamfered and inserted into the fittings to full depth. Fittings shall be manufactured in accordance with ASTM F1924.

DRAFT

M2105.12 Polypropylene (PP) plastic. Joints between PP plastic pipe and fittings shall comply with Sections M2105.12.1 and M2105.12.2.

M2105.12.1 Heat-fusion joints. Heat-fusion joints for polypropylene (PP) pipe and tubing joints shall be installed with socket-type heat-fused polypropylene fittings, electrofusion polypropylene fittings or by butt fusion. Joint surfaces shall be clean and free from moisture. The joint shall remain undisturbed until cool. Joints shall be made in accordance with ASTM F2389.

M2105.12.2 Mechanical and compression sleeve joints. Mechanical and compression sleeve joints shall be installed in accordance with the manufacturer's instructions.

M2105.13 Raised temperature polyethylene (PE-RT) plastic tubing. Joints between raised temperature polyethylene tubing and fittings shall comply with Sections M2105.13.1 through M2105.13.4. Mechanical joints shall comply with Section M2105.8.1.

M2105.13.1 Compression-type fittings. Where compression-type fittings include inserts and ferrules or O-rings, the fittings shall be installed without omitting the inserts and ferrules or O-rings.

M2105.13.2 PE-RT-to-metal connections. Solder joints in a metal pipe shall not occur within 18 inches (457 mm) of a transition from such metal pipe to PE-RT pipe or tubing.

M2105.13.3 Heat-fusion joints. Heat-fusion joints shall be of the socket-fusion, saddle-fusion or butt-fusion type, and shall be joined in accordance with ASTM D2657. Joint surfaces shall be clean and free from moisture. Joint surfaces shall be heated to melt temperatures and joined. The joint shall remain undisturbed until cool. Fittings shall be manufactured in accordance with ASTM D2683 or ASTM D3261.

M2105.13.4 Electrofusion joints. Joints shall be of the electrofusion type. Joint surfaces shall be clean and free from moisture and scoured to expose virgin resin. Joint surfaces shall be heated to melt temperatures for the period of time specified by the manufacturer and joined. The joint shall remain undisturbed until cool. Fittings shall be manufactured in accordance with ASTM F1055.

[W][S] M2105.14 PVC plastic pipe. Joints between PVC plastic pipe or fittings shall be solvent-cemented in accordance with Section ((~~P2906.9.1.4~~)) 605.12.2 of the *Uniform Plumbing Code*. Threaded joints between fittings and PVC plastic pipe shall be in accordance with Section M2105.9.1.

M2105.15 Shutoff valves. Shutoff valves shall be installed in ground-source loop piping systems in the locations indicated in Sections M2105.15.1 through M2105.15.6.

M2105.15.1 Heat exchangers. Shutoff valves shall be installed on the supply and return side of a heat exchanger.

Exception: Shutoff valves shall not be required where heat exchangers are integral with a boiler or are a component of a manufacturer's boiler and heat exchanger packaged unit and are capable of being isolated from the hydronic system by the supply and return valves required by Section M2001.3.

M2105.15.2 Central systems. Shutoff valves shall be installed on the building supply and return of a central utility system.

M2105.15.3 Pressure vessels. Shutoff valves shall be installed on the connection to any pressure vessel.

M2105.15.4 Pressure-reducing valves. Shutoff valves shall be installed on both sides of a pressure-reducing valve.

M2105.15.5 Equipment and appliances. Shutoff valves shall be installed on connections to mechanical equipment and appliances. This requirement does not apply to components of ground-source loop systems such as pumps, air separators, metering devices, and similar equipment.

M2105.15.6 Expansion tanks. Shutoff valves shall be installed at connections to nondiaphragm-type expansion tanks.

M2105.16 Reduced pressure. A pressure relief valve shall be installed on the low-pressure side of a hydronic piping system that has been reduced in pressure. The relief valve shall be set at the maximum pressure of the system design. The valve shall be installed in accordance with Section M2002.

M2105.17 Installation. Piping, valves, fittings, and connections shall be installed in accordance with the manufacturer's instructions.

[W][S] M2105.18 Protection of potable water. Where ground-source heat-pump ground-loop systems have a connection to a potable water supply, the potable water system shall be protected from backflow in accordance with Section ((~~P2902~~)) 603 of the *Uniform Plumbing Code*.

[W][S] M2105.19 Pipe penetrations. Openings for pipe penetrations in walls, floors and ceilings shall be larger than the penetrating pipe. Openings through concrete or masonry building elements shall be sleeved. The annular space surrounding pipe penetrations shall be protected in accordance with Section ((~~P2606.1~~)) Section 312 of the *Uniform Plumbing Code*.

M2105.20 Clearance from combustibles. A pipe in a ground-source heat pump piping system having an exterior surface temperature exceeding 250°F (121°C) shall have a clearance of not less than 1 inch (25 mm) from combustible materials.

DRAFT

CHAPTER 23

SOLAR THERMAL ENERGY SYSTEMS

User notes:

About this chapter: *Chapter 23 is specific to thermal solar systems and equipment. Solar voltaic systems are not addressed in this chapter. This chapter covers solar collectors, system design, safety devices, relief valves, freeze protection, expansion tanks, signage, labeling, heat transfer fluids, protection of potable water and potable water heating.*

Code development reminder: *Code change proposals to this chapter will be considered by the IRC—Plumbing/Mechanical Code Development Committee during the 2018 (Group A) Code Development Cycle. See explanation on page iv.*

SECTION M2301
SOLAR THERMAL ENERGY SYSTEMS

M2301.1 General. This section provides for the design, construction, installation, *alteration* and repair of *equipment* and systems using solar thermal energy to provide space heating or cooling, hot water heating and swimming pool heating.

M2301.2 Design and installation. The design and installation of solar thermal energy systems shall comply with Sections M2301.2.1 through M2301.2.13.

M2301.2.1 Access. Access shall be provided to solar energy *equipment* for maintenance. Solar systems and appurtenances shall not obstruct or interfere with the operation of any doors, windows or other building components requiring operation or access. Roof-mounted solar thermal equipment shall not obstruct or interfere with the operation of roof-mounted equipment, appliances, chimneys, plumbing vents, roof hatches, smoke vents, skylights and other roof penetrations and openings.

M2301.2.2 Collectors and panels. Solar collectors and panels shall comply with Sections M2301.2.2.1 and M2301.2.2.2.

M2301.2.2.1 Roof-mounted collectors. The roof shall be constructed to support the loads imposed by roof-mounted solar collectors. Roof-mounted solar collectors that serve as a roof covering shall conform to the requirements for roof coverings in Chapter 9 of this code. Where mounted on or above the roof coverings, the collectors and supporting structure shall be constructed of noncombustible materials or fire-retardant-treated wood equivalent to that required for the roof construction.

M2301.2.2.2 Collector sensors. Collector sensor installation, sensor location and the protection of exposed sensor wires from degradation shall be in accordance with ICC 900/SRCC 300.

[W][S] M2301.2.3 Pressure and temperature relief valves and system components. System components containing fluids shall be protected with temperature and pressure relief valves or pressure relief valves. Relief devices shall be installed in sections of the system so that a section cannot be valved off or isolated from a relief device. Direct systems and the potable water portion of indirect systems shall be equipped with a relief valve in accordance with Section ((~~P2804~~)) 504 of the *Uniform Plumbing Code*. For indirect systems, pressure relief valves in solar loops shall comply with ICC 900/SRCC 300. System components shall have a working pressure rating of not less than the setting of the pressure relief device.

M2301.2.4 Vacuum relief. System components that might be subjected to a vacuum during operation or shutdown shall be designed to withstand such a vacuum or shall be protected with vacuum relief valves.

[W][S] M2301.2.5 Piping insulation. Piping shall be insulated in accordance with the requirements of ((~~Chapter 11~~)) the residential portion of the *Seattle Energy Code*. Exterior insulation shall be protected from ultraviolet degradation. The entire solar loop shall be insulated. Where split-style insulation is used, the seam shall be sealed. Fittings shall be fully insulated.

Exceptions:

1. Those portions of the piping that are used to help prevent the system from overheating shall not be required to be insulated.
2. Those portions of piping that are exposed to solar radiation, made of the same material as the solar collector absorber plate and are covered in the same manner as the solar collector absorber, or that are used to collect additional solar energy, shall not be required to be insulated.
3. Piping in thermal solar systems using unglazed solar collectors to heat a swimming pool shall not be required to be insulated.

M2301.2.6 Protection from freezing. System components shall be protected from damage resulting from freezing of heat-transfer liquids at the winter design temperature provided in Table R301.2(1). Freeze protection shall be provided in accor-

DRAFT

dance with ICC 900/SRCC 300. Drain-back systems shall be installed in compliance with Section M2301.2.6.1. Systems utilizing freeze-protection valves shall comply with Section M2301.2.6.2.

Exception: Where the 97.5-percent winter design temperature is greater than or equal to 48°F (9°C).

M2301.2.6.1 Drain-back systems. Drain-back systems shall be designed and installed to allow for manual gravity draining of fluids from areas subject to freezing to locations not subject to freezing, and air filling of the components and piping. Such piping and components shall maintain a horizontal slope in the direction of flow of not less than one-fourth unit vertical in 12 units horizontal (2-percent slope). Piping and components subject to manual gravity draining shall permit subsequent air filling upon drainage and air venting upon refilling.

M2301.2.6.2 Freeze-protection valves. Freeze-protection valves shall discharge in a manner that does not create a hazard or structural damage.

M2301.2.7 Storage tank sensors. Storage tank sensors shall comply with ICC 900/SRCC 300.

M2301.2.8 Expansion tanks. Expansion tanks in solar energy systems shall be installed in accordance with Section M2003 in solar collector loops that contain pressurized heat transfer fluid. Where expansion tanks are used, the system shall be designed in accordance with ICC 900/SRCC 300 to provide an expansion tank that is sized to withstand the maximum operating pressure of the system.

Exception: Expansion tanks shall not be required in the collector loop of *drain-back systems*.

M2301.2.9 Roof and wall penetrations. Roof and wall penetrations shall be flashed and sealed in accordance with Chapter 9 to prevent entry of water, rodents and insects.

M2301.2.10 Description and warning labels. Solar thermal systems shall comply with description label and warning label requirements of Section M2301.2.11.2 and ICC 900/SRCC 300.

M2301.2.11 Solar loop. Solar loops shall be in accordance with Sections M2301.2.11.1 and M2301.2.11.2.

M2301.2.11.1 Solar loop isolation. Valves shall be installed to allow the solar loop to be isolated from the remainder of the system.

M2301.2.11.2 Drain and fill valve labels and caps. Drain and fill valves shall be labeled with a description and warning that identifies the fluid in the solar loop and a warning that the fluid might be discharged at high temperature and pressure. Drain caps shall be installed at drain and fill valves.

M2301.2.12 Maximum temperature limitation. Systems shall be equipped with means to limit the maximum water temperature of the system fluid entering or exchanging heat with any pressurized vessel inside the *dwelling* to 180°F (82°C). This protection is in addition to the required temperature and pressure relief valves required by Section M2301.2.3.

M2301.2.13 Thermal storage unit seismic bracing. In Seismic Design Categories D_0, D_1 and D_2 and in townhouses in Seismic Design Category C, thermal storage units shall be anchored in accordance with Section M1307.2.

M2301.3 Labeling. *Labeling* shall comply with Sections M2301.3.1 and M2301.3.2.

M2301.3.1 Collectors and panels. Solar thermal collectors and panels shall be listed and labeled in accordance with ICC 901/SRCC 100. Factory-built collectors shall bear a label indicating the manufacturer's name, model number and serial number.

M2301.3.2 Thermal storage units. Pressurized water storage tanks shall bear a label indicating the manufacturer's name and address, model number, serial number, storage unit maximum and minimum allowable operating temperatures and storage unit maximum and minimum allowable operating pressures. The *label* shall clarify that these specifications apply only to the water storage tanks.

[W][S] M2301.4 Heat transfer gases or liquids and heat exchangers. *Essentially toxic transfer fluids*, ethylene glycol, flammable gases and flammable liquids shall not be used as heat transfer fluids. Heat transfer gases and liquids shall be rated to withstand the system's maximum design temperature under operating conditions without degradation. Heat exchangers used in solar thermal systems shall comply with Section ((~~P2902.5.2~~)) 603.5.4 of the *Uniform Plumbing Code* and ICC 900/SRCC 300.

Heat transfer fluids shall be in accordance with SRCC 300. The flash point of the heat transfer fluids utilized in solar thermal systems shall be not less than 50°F (28°C) above the design maximum nonoperating or no-flow temperature attained by the fluid in the collector.

M2301.5 Backflow protection. Connections from the potable water supply to solar systems shall comply with ((~~Section P2902.5.5~~)) the *Uniform Plumbing Code*.

M2301.6 Filtering. Air provided to occupied spaces that passes through thermal mass storage systems by mechanical means shall be filtered for particulates at the outlet of the thermal mass storage system.

M2301.7 Solar thermal systems for heating potable water. Where a solar thermal system heats potable water to supply a potable hot water distribution system, the solar thermal system shall be in accordance with Sections M2301.7.1, M2301.7.2 and ((~~P2902.5.5~~)) the *Uniform Plumbing Code*.

DRAFT

[S] M2301.7.1 Indirect systems. Heat exchangers that are components of indirect solar thermal heating systems shall comply with ((~~Section P2902.5.2~~)) the *Uniform Plumbing Code*.

[S] M2301.7.2 Direct systems. Where potable water is directly heated by a solar thermal system, the pipe, fittings, valves and other components that are in contact with the potable water in the solar heating system shall comply with the requirements of Chapter ((~~29~~)) 6 of the *Uniform Plumbing Code*.

DRAFT

Part VII—Plumbing

CHAPTERS 25 through 28

Note: Chapters 25 through 28 are not adopted in The City of Seattle. See the *Uniform Plumbing Code.*

DRAFT

CHAPTER 29

WATER SUPPLY AND DISTRIBUTION

User notes:

About this chapter: *Many plumbing fixtures require a supply of potable water. Other fixtures could be supplied with nonpotable water such as reclaimed water. Chapter 29 covers the requirements for water distribution piping systems to and within buildings. The regulations include the types of materials and the connection methods for such systems. This chapter regulates the assemblies, devices and methods that are used for the prevention of backflow of contaminated or polluted water into the potable water system. Also contained in this chapter are the design requirements for the installation of fire sprinkler systems, as such systems are connected to the potable water supply for the building. Storm water and some liquid waste from a building can be a source of nonpotable water that can used to reduce the volume of potable water supplied to the building. This chapter provides the requirements for storage, treatment and distribution of this resource. This chapter also regulates the piping systems for reclaimed water supplied by a wastewater treatment facility.*

Code development reminder: *Code change proposals to this chapter will be considered by the IRC—Mechanical/Plumbing Code Development Committee during the 2018 (Group A) Code Development Cycle. See explanation on page iv.*

Sections of Chapter 29 not shown are not adopted by The City of Seattle.

SECTION P2904
DWELLING UNIT FIRE SPRINKLER SYSTEMS

P2904.1 General. The design and installation of residential fire sprinkler systems shall be in accordance with NFPA 13D or Section P2904, which shall be considered to be equivalent to NFPA 13D. Partial residential sprinkler systems shall be permitted to be installed only in buildings not required to be equipped with a residential sprinkler system. Section P2904 shall apply to stand-alone and multipurpose wet-pipe sprinkler systems that do not include the use of antifreeze. A multipurpose fire sprinkler system shall provide domestic water to both fire sprinklers and plumbing fixtures. A stand-alone sprinkler system shall be separate and independent from the water distribution system. A backflow preventer shall not be required to separate a sprinkler system from the water distribution system, provided that the sprinkler system complies with all of the following:

1. The system complies with NFPA 13D or Section P2904.
2. The piping material complies with Section P2906.
3. The system does not contain antifreeze.
4. The system does not have a fire department connection.

P2904.1.1 Required sprinkler locations. Sprinklers shall be installed to protect all areas of a *dwelling unit*.

Exceptions:

1. ((~~Attics~~)) Uninhabitable attics, crawl spaces and normally unoccupied concealed spaces that do not contain fuel-fired appliances do not require sprinklers. In uninhabitable *attics*, crawl spaces and normally unoccupied concealed spaces that contain fuel-fired equipment, a sprinkler shall be installed above the equipment; however, sprinklers shall not be required in the remainder of the space.
2. Clothes closets, linen closets and pantries not exceeding 24 square feet (2.2 m^2) in area, with the smallest dimension not greater than 3 feet (915 mm) and having wall and ceiling surfaces of gypsum board.
3. Bathrooms not more than 55 square feet (5.1 m^2) in area.
4. Garages; carports; exterior porches; unheated entry areas, such as mud rooms, that are adjacent to an exterior door; and similar areas.

P2904.2 Sprinklers. Sprinklers shall be new listed residential sprinklers and shall be installed in accordance with the sprinkler manufacturer's instructions.

P2904.2.1 Temperature rating and separation from heat sources. Except as provided for in Section P2904.2.2, sprinklers shall have a temperature rating of not less than 135°F (57°C) and not more than 170°F (77°C). Sprinklers shall be separated from heat sources as required by the sprinkler manufacturer's installation instructions.

P2904.2.2 Intermediate temperature sprinklers. Sprinklers shall have an intermediate temperature rating not less than 175°F (79°C) and not more than 225°F (107°C) where installed in the following locations:

1. Directly under skylights, where the sprinkler is exposed to direct sunlight.
2. In *attics*.
3. In concealed spaces located directly beneath a roof.

DRAFT

4. Within the distance to a heat source as specified in Table P2904.2.2.

TABLE P2904.2.2
LOCATIONS WHERE INTERMEDIATE TEMPERATURE SPRINKLERS ARE REQUIRED

HEAT SOURCE	RANGE OF DISTANCE FROM HEAT SOURCE WITHIN WHICH INTERMEDIATE TEMPERATURE SPRINKLERS ARE REQUIRED[a, b] (inches)
Fireplace, side of open or recessed fireplace	12 to 36
Fireplace, front of recessed fireplace	36 to 60
Coal and wood burning stove	12 to 42
Kitchen range top	9 to 18
Oven	9 to 18
Vent connector or chimney connector	9 to 18
Heating duct, not insulated	9 to 18
Hot water pipe, not insulated	6 to 12
Side of ceiling or wall warm air register	12 to 24
Front of wall mounted warm air register	18 to 36
Water heater, furnace or boiler	3 to 6
Luminaire up to 250 watts	3 to 6
Luminaire 250 watts up to 499 watts	6 to 12

For SI: 1 inch = 25.4 mm.
a. Sprinklers shall not be located at distances less than the minimum table distance unless the sprinkler listing allows a lesser distance.
b. Distances shall be measured in a straight line from the nearest edge of the heat source to the nearest edge of the sprinkler.

P2904.2.3 Freezing areas. Piping shall be protected from freezing as required by Section P2603.5. Where sprinklers are required in areas that are subject to freezing, dry-sidewall or dry-pendent sprinklers extending from a nonfreezing area into a freezing area shall be installed.

P2904.2.4 Sprinkler coverage. Sprinkler coverage requirements and sprinkler obstruction requirements shall be in accordance with Sections P2904.2.4.1 and P2904.2.4.2.

P2904.2.4.1 Coverage area limit. The area of coverage of a single sprinkler shall not exceed 400 square feet (37 m^2) and shall be based on the sprinkler *listing* and the sprinkler manufacturer's installation instructions.

P2904.2.4.2 Obstructions to coverage. Sprinkler discharge shall not be blocked by obstructions unless additional sprinklers are installed to protect the obstructed area. Additional sprinklers shall not be required where the sprinkler separation from obstructions complies with either the minimum distance indicated in Figure P2904.2.4.2 or the minimum distances specified in the sprinkler manufacturer's instructions where the manufacturer's instructions permit a lesser distance.

DRAFT

PENDANT SPRINKLER TO SIDE OBSTRUCTION

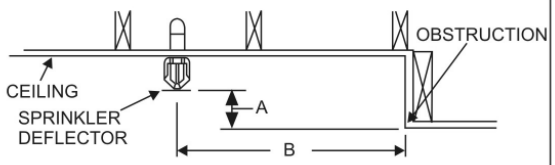

WHERE "A" IS LESS THAN OR EQUAL TO: (INCHES)	"B" MUST BE NOT LESS THAN: (FEET)
1	1½
3	3
5	4
7	4½
9	1½
11	6½
14	7

SIDEWALL SPRINKLER TO SIDE OBSTRUCTION

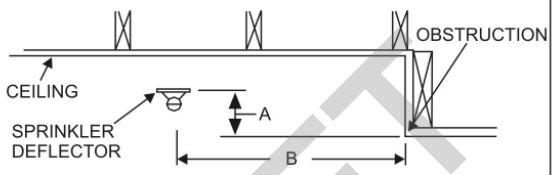

WHERE "A" IS LESS THAN OR EQUAL TO: (INCHES)	"B" MUST BE NOT LESS THAN: (FEET)
1	1½
3	3
5	4
7	4½
9	6
11	6½
14	7

SIDEWALL SPRINKLER TO FORWARD OBSTRUCTION

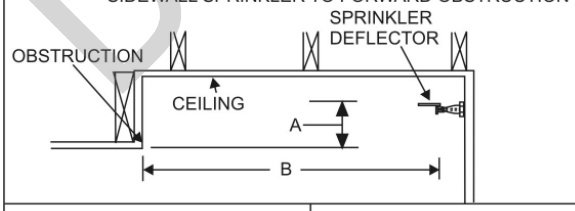

WHERE "A" IS LESS THAN OR EQUAL TO: (INCHES)	"B" MUST BE NOT LESS THAN: (FEET)
1	8
2	10
3	11
4	12
6	13
7	14
9	15
11	16
14	17

DRAFT

For SI: 1 inch = 25.4 mm, 1 foot = 304.8 mm.

FIGURE P2904.2.4.2
MINIMUM ALLOWABLE DISTANCE BETWEEN SPRINKLER AND OBSTRUCTION

P2904.2.4.2.1 Additional requirements for pendent sprinklers. Pendent sprinklers within 3 feet (915 mm) of the center of a ceiling fan, surface-mounted ceiling luminaire or similar object shall be considered to be obstructed, and additional sprinklers shall be installed.

P2904.2.4.2.2 Additional requirements for sidewall sprinklers. Sidewall sprinklers within 5 feet (1524 mm) of the center of a ceiling fan, surface-mounted ceiling luminaire or similar object shall be considered to be obstructed, and additional sprinklers shall be installed.

P2904.2.5 Sprinkler installation on systems assembled with solvent cement. The solvent cementing of threaded adapter fittings shall be completed and threaded adapters for sprinklers shall be verified as being clear of excess cement prior to the installation of sprinklers on systems assembled with solvent cement.

P2904.2.6 Sprinkler modifications prohibited. Painting, caulking or modifying of sprinklers shall be prohibited. Sprinklers that have been painted, caulked, modified or damaged shall be replaced with new sprinklers.

P2904.3 Sprinkler piping system. Sprinkler piping shall be supported in accordance with requirements for cold water distribution piping. Sprinkler piping shall comply with the requirements for cold water distribution piping. For multipurpose piping systems, the sprinkler piping shall connect to and be a part of the cold water distribution piping system.

Exception: For plastic piping, it shall be permissible to follow the manufacturer's installation instructions.

P2904.3.1 Nonmetallic pipe and tubing. Nonmetallic pipe and tubing, such as CPVC, PEX, and PE-RT shall be *listed* for use in residential fire sprinkler systems.

P2904.3.1.1 Nonmetallic pipe protection. Nonmetallic pipe and tubing systems shall be protected from exposure to the living space by a layer of not less than 3/8-inch-thick (9.5 mm) gypsum wallboard, 1/2-inch-thick (13 mm) plywood, or other material having a 15-minute fire rating.

Exceptions:

1. Pipe protection shall not be required in areas that do not require protection with sprinklers as specified in Section P2904.1.1.
2. Pipe protection shall not be required where exposed piping is permitted by the pipe *listing*.

P2904.3.2 Shutoff valves prohibited. With the exception of shutoff valves for the entire water distribution system, valves shall not be installed in any location where the valve would isolate piping serving one or more sprinklers.

P2904.3.3 Single dwelling limit. Piping beyond the service valve located at the beginning of the water distribution system shall not serve more than one *dwelling*.

P2904.3.4 Drain. A means to drain the sprinkler system shall be provided on the system side of the water distribution shutoff valve.

P2904.4 Determining system design flow. The flow for sizing the sprinkler piping system shall be based on the flow rating of each sprinkler in accordance with Section P2904.4.1 and the calculation in accordance with Section P2904.4.2.

P2904.4.1 Determining required flow rate for each sprinkler. The minimum required flow for each sprinkler shall be determined using the sprinkler manufacturer's published data for the specific sprinkler model based on all of the following:

1. The area of coverage.
2. The ceiling configuration.
3. The temperature rating.
4. Any additional conditions specified by the sprinkler manufacturer.

P2904.4.2 System design flow rate. The design flow rate for the system shall be based on the following:

1. The design flow rate for a room having only one sprinkler shall be the flow rate required for that sprinkler, as determined by Section P2904.4.1.
2. The design flow rate for a room having two or more sprinklers shall be determined by identifying the sprinkler in that room with the highest required flow rate, based on Section P2904.4.1, and multiplying that flow rate by 2.
3. Where the sprinkler manufacturer specifies different criteria for ceiling configurations that are not smooth, flat and horizontal, the required flow rate for that room shall comply with the sprinkler manufacturer's instructions.
4. The design flow rate for the sprinkler system shall be the flow required by the room with the largest flow rate, based on Items 1, 2 and 3.
5. For the purpose of this section, it shall be permissible to reduce the design flow rate for a room by subdividing the space into two or more rooms, where each room is evaluated separately with respect to the required design flow rate. Each room shall be bounded by walls and a ceiling. Openings in walls shall have a lintel not less than 8 inches (203 mm) in depth and each lintel shall form a solid barrier between the ceiling and the top of the opening.

P2904.5 Water supply. The water supply shall provide not less than the required design flow rate for sprinklers in accordance with Section P2904.4.2 at a pressure not less than that used to comply with Section P2904.6.

DRAFT

P2904.5.1 Water supply from individual sources. Where a *dwelling unit* water supply is from a tank system, a private well system or a combination of these, the available water supply shall be based on the minimum pressure control setting for the pump.

P2904.5.2 Required capacity. The water supply shall have the capacity to provide the required design flow rate for sprinklers for a period of time as follows:

1. Seven minutes for *dwelling units* one *story* in height and less than 2,000 square feet (186 m^2) in area.
2. Ten minutes for *dwelling units* two or more stories in height or equal to or greater than 2,000 square feet (186 m^2) in area.

Where a well system, a water supply tank system or a combination thereof is used, any combination of well capacity and tank storage shall be permitted to meet the capacity requirement.

P2904.6 Pipe sizing. The piping to sprinklers shall be sized for the flow required by Section P2904.4.2. The flow required to supply the plumbing fixtures shall not be required to be added to the sprinkler design flow.

P2904.6.1 Method of sizing pipe. Piping supplying sprinklers shall be sized using the prescriptive method in Section P2904.6.2 or by hydraulic calculation in accordance with NFPA 13D. The minimum pipe size from the water supply source to any sprinkler shall be 3/4 inch (19 mm) nominal. Threaded adapter fittings at the point where sprinklers are attached to the piping shall be not less than 1/2 inch (13 mm) nominal.

P2904.6.2 Prescriptive pipe sizing method. Pipe shall be sized by determining the available pressure to offset friction loss in piping and identifying a piping material, diameter and length using the equation in Section P2904.6.2.1 and the procedure in Section P2904.6.2.2.

P2904.6.2.1 Available pressure equation. The pressure available to offset friction loss in the interior piping system (P_t) shall be determined in accordance with the Equation 29-1.

$P_t = P_{sup} - PL_{svc} - PL_m - PL_d - PL_e - P_{sp}$ **(Equation 29-1)**

where:

P_t = Pressure used in applying Tables P2904.6.2(4) through P2904.6.2(9).

P_{sup} = Pressure available from the water supply source.

PL_{svc} = Pressure loss in the water service pipe. (Table P2904.6.2(1))

PL_m = Pressure loss in the water meter. (Table P2904.6.2(2))

PL_d = Pressure loss from devices other than the water meter.

PL_e = Pressure loss associated with changes in elevation. (Table P2904.6.2(3))

P_{sp} = Maximum pressure required by a sprinkler.

DRAFT

TABLE P2904.6.2(1)
WATER SERVICE PRESSURE LOSS (PL_{svc})[a, b]

FLOW RATE[c] (gpm)	3/4-INCH WATER SERVICE PRESSURE LOSS (psi)				1-INCH WATER SERVICE PRESSURE LOSS (psi)				1-1/4 -INCH WATER SERVICE PRESSURE LOSS (psi)			
	Length of water service pipe (feet)				Length of water service pipe (feet)				Length of water service pipe (feet)			
	40 or less	41 to 75	76 to 100	101 to 150	40 or less	41 to 75	76 to 100	101 to 150	40 or less	41 to 75	76 to 100	101 to 150
8	5.1	8.7	11.8	17.4	1.5	2.5	3.4	5.1	0.6	1.0	1.3	1.9
10	7.7	13.1	17.8	26.3	2.3	3.8	5.2	7.7	0.8	1.4	2.0	2.9
12	10.8	18.4	24.9	NP	3.2	5.4	7.3	10.7	1.2	2.0	2.7	4.0
14	14.4	24.5	NP	NP	4.2	7.1	9.6	14.3	1.6	2.7	3.6	5.4
16	18.4	NP	NP	NP	5.4	9.1	12.4	18.3	2.0	3.4	4.7	6.9
18	22.9	NP	NP	NP	6.7	11.4	15.4	22.7	2.5	4.3	5.8	8.6
20	27.8	NP	NP	NP	8.1	13.8	18.7	27.6	3.1	5.2	7.0	10.4
22	NP	NP	NP	NP	9.7	16.5	22.3	NP	3.7	6.2	8.4	12.4
24	NP	NP	NP	NP	11.4	19.3	26.2	NP	4.3	7.3	9.9	14.6
26	NP	NP	NP	NP	13.2	22.4	NP	NP	5.0	8.5	11.4	16.9
28	NP	NP	NP	NP	15.1	25.7	NP	NP	5.7	9.7	13.1	19.4
30	NP	NP	NP	NP	17.2	NP	NP	NP	6.5	11.0	14.9	22.0
32	NP	NP	NP	NP	19.4	NP	NP	NP	7.3	12.4	16.8	24.8
34	NP	NP	NP	NP	21.7	NP	NP	NP	8.2	13.9	18.8	NP
36	NP	NP	NP	NP	24.1	NP	NP	NP	9.1	15.4	20.9	NP

For SI: 1 inch = 25.4 mm, 1 foot = 304.8 mm, 1 gallon per minute = 0.063 L/s, 1 pound per square inch = 6.895 kPa.

NP = Not Permitted. Pressure loss exceeds reasonable limits.

a. Values are applicable for underground piping materials listed in Table P2905.4 and are based on an SDR of 11 and a Hazen Williams C Factor of 150.

b. Values include the following length allowances for fittings: 25% length increase for actual lengths up to 100 feet and 15% length increase for actual lengths over 100 feet.

c. Flow rate from Section P2904.4.2. Add 5 gpm to the flow rate required by Section P2904.4.2 where the water service pipe supplies more than one dwelling.

TABLE P2904.6.2(2)
MINIMUM WATER METER PRESSURE LOSS (PL_m)[a]

FLOW RATE (gallons per minute, gpm)[b]	5/8-INCH METER PRESSURE LOSS (pounds per square inch, psi)	3/4-INCH METER PRESSURE LESS (pounds per square inch, psi)	1-INCH METER PRESSURE LOSS (pounds per square inch, psi)
8	2	1	1
10	3	1	1
12	4	1	1
14	5	2	1
16	7	3	1
18	9	4	1
20	11	4	2
22	NP	5	2
24	NP	5	2
26	NP	6	2
28	NP	6	2
30	NP	7	2
32	NP	7	3
34	NP	8	3
36	NP	8	3

For SI: 1 inch = 25.4 mm, 1 pound per square inch = 6.895 kPa, 1 gallon per minute = 0.063 L/s.

NP = Not permitted unless the actual water meter pressure loss is known.

a. Table P2904.6.2(2) establishes conservative values for water meter pressure loss or installations where the water meter loss is unknown. Where the actual water meter pressure loss is known, P_m shall be the actual loss.

b. Flow rate from Section P2904.4.2. Add 5 gpm to the flow rate required by Section P2904.4.2 where the water service pipe supplies more than one dwelling.

DRAFT

TABLE P2904.6.2(3)
ELEVATION LOSS (PL_e)

ELEVATION (feet)	PRESSURE LOSS (psi)
5	2.2
10	4.4
15	6.5
20	8.7
25	10.9
30	13
35	15.2
40	17.4

For SI: 1 foot = 304.8 mm, 1 pound per square inch = 6.895 kPa.

DRAFT

TABLE P2904.6.2(4)
ALLOWABLE PIPE LENGTH FOR 3/4-INCH TYPE M COPPER WATER TUBING

SPRINKLER FLOW RATE[a] (gpm)	WATER DISTRIBUTION SIZE (inch)	AVAILABLE PRESSURE—P_t (psi)									
		15	20	25	30	35	40	45	50	55	60
		Allowable length of pipe from service valve to farthest sprinkler (feet)									
8	3/4	217	289	361	434	506	578	650	723	795	867
9	3/4	174	232	291	349	407	465	523	581	639	697
10	3/4	143	191	239	287	335	383	430	478	526	574
11	3/4	120	160	200	241	281	321	361	401	441	481
12	3/4	102	137	171	205	239	273	307	341	375	410
13	3/4	88	118	147	177	206	235	265	294	324	353
14	3/4	77	103	128	154	180	205	231	257	282	308
15	3/4	68	90	113	136	158	181	203	226	248	271
16	3/4	60	80	100	120	140	160	180	200	220	241
17	3/4	54	72	90	108	125	143	161	179	197	215
18	3/4	48	64	81	97	113	129	145	161	177	193
19	3/4	44	58	73	88	102	117	131	146	160	175
20	3/4	40	53	66	80	93	106	119	133	146	159
21	3/4	36	48	61	73	85	97	109	121	133	145
22	3/4	33	44	56	67	78	89	100	111	122	133
23	3/4	31	41	51	61	72	82	92	102	113	123
24	3/4	28	38	47	57	66	76	85	95	104	114
25	3/4	26	35	44	53	61	70	79	88	97	105
26	3/4	24	33	41	49	57	65	73	82	90	98
27	3/4	23	30	38	46	53	61	69	76	84	91
28	3/4	21	28	36	43	50	57	64	71	78	85
29	3/4	20	27	33	40	47	53	60	67	73	80
30	3/4	19	25	31	38	44	50	56	63	69	75
31	3/4	18	24	29	35	41	47	53	59	65	71
32	3/4	17	22	28	33	39	44	50	56	61	67
33	3/4	16	21	26	32	37	42	47	53	58	63
34	3/4	NP	20	25	30	35	40	45	50	55	60
35	3/4	NP	19	24	28	33	38	42	47	52	57
36	3/4	NP	18	22	27	31	36	40	45	49	54
37	3/4	NP	17	21	26	30	34	38	43	47	51
38	3/4	NP	16	20	24	28	32	36	40	45	49
39	3/4	NP	15	19	23	27	31	35	39	42	46
40	3/4	NP	NP	18	22	26	29	33	37	40	44

For SI: 1 inch = 25.4 mm, 1 foot = 304.8 mm, 1 pound per square inch = 6.895 kPa, 1 gallon per minute = 0.963 L/s.
NP = Not Permitted.
a. Flow rate from Section P2904.4.2.

DRAFT

TABLE P2904.6.2(5)
ALLOWABLE PIPE LENGTH FOR 1-INCH TYPE M COPPER WATER TUBING

SPRINKLER FLOW RATE[a] (gpm)	WATER DISTRIBUTION SIZE (inch)	AVAILABLE PRESSURE—P_t (psi)									
		15	20	25	30	35	40	45	50	55	60
		Allowable length of pipe from service valve to farthest sprinkler (feet)									
8	1	806	1075	1343	1612	1881	2149	2418	2687	2955	3224
9	1	648	864	1080	1296	1512	1728	1945	2161	2377	2593
10	1	533	711	889	1067	1245	1422	1600	1778	1956	2134
11	1	447	586	745	894	1043	1192	1341	1491	1640	1789
12	1	381	508	634	761	888	1015	1142	1269	1396	1523
13	1	328	438	547	657	766	875	985	1094	1204	1313
14	1	286	382	477	572	668	763	859	954	1049	1145
15	1	252	336	420	504	588	672	756	840	924	1008
16	1	224	298	373	447	522	596	671	745	820	894
17	1	200	266	333	400	466	533	600	666	733	799
18	1	180	240	300	360	420	479	539	599	659	719
19	1	163	217	271	325	380	434	488	542	597	651
20	1	148	197	247	296	345	395	444	493	543	592
21	1	135	180	225	270	315	360	406	451	496	541
22	1	124	165	207	248	289	331	372	413	455	496
23	1	114	152	190	228	267	305	343	381	419	457
24	1	106	141	176	211	246	282	317	352	387	422
25	1	98	131	163	196	228	261	294	326	359	392
26	1	91	121	152	182	212	243	273	304	334	364
27	1	85	113	142	170	198	226	255	283	311	340
28	1	79	106	132	159	185	212	238	265	291	318
29	1	74	99	124	149	174	198	223	248	273	298
30	1	70	93	116	140	163	186	210	233	256	280
31	1	66	88	110	132	153	175	197	219	241	263
32	1	62	83	103	124	145	165	186	207	227	248
33	1	59	78	98	117	137	156	176	195	215	234
34	1	55	74	92	111	129	148	166	185	203	222
35	1	53	70	88	105	123	140	158	175	193	210
36	1	50	66	83	100	116	133	150	166	183	199
37	1	47	63	79	95	111	126	142	158	174	190
38	1	45	60	75	90	105	120	135	150	165	181
39	1	43	57	72	86	100	115	129	143	158	172
40	1	41	55	68	82	96	109	123	137	150	164

For SI: 1 inch = 25.4 mm, 1 foot = 304.8 mm, 1 pound per square inch = 6.895 kPa, 1 gallon per minute = 0.963 L/s.
a. Flow rate from Section P2904.4.2.

DRAFT

TABLE P2904.6.2(6)
ALLOWABLE PIPE LENGTH FOR 3/4-INCH CPVC PIPE

SPRINKLER FLOW RATE[a] (gpm)	WATER DISTRIBUTION SIZE (inch)	AVAILABLE PRESSURE—P_t (psi)									
		15	20	25	30	35	40	45	50	55	60
		Allowable length of pipe from service valve to farthest sprinkler (feet)									
8	3/4	348	465	581	697	813	929	1045	1161	1278	1394
9	3/4	280	374	467	560	654	747	841	934	1027	1121
10	3/4	231	307	384	461	538	615	692	769	845	922
11	3/4	193	258	322	387	451	515	580	644	709	773
12	3/4	165	219	274	329	384	439	494	549	603	658
13	3/4	142	189	237	284	331	378	426	473	520	568
14	3/4	124	165	206	247	289	330	371	412	454	495
15	3/4	109	145	182	218	254	290	327	363	399	436
16	3/4	97	129	161	193	226	258	290	322	354	387
17	3/4	86	115	144	173	202	230	259	288	317	346
18	3/4	78	104	130	155	181	207	233	259	285	311
19	3/4	70	94	117	141	164	188	211	234	258	281
20	3/4	64	85	107	128	149	171	192	213	235	256
21	3/4	58	78	97	117	136	156	175	195	214	234
22	3/4	54	71	89	107	125	143	161	179	197	214
23	3/4	49	66	82	99	115	132	148	165	181	198
24	3/4	46	61	76	91	107	122	137	152	167	183
25	3/4	42	56	71	85	99	113	127	141	155	169
26	3/4	39	52	66	79	92	105	118	131	144	157
27	3/4	37	49	61	73	86	98	110	122	135	147
28	3/4	34	46	57	69	80	92	103	114	126	137
29	3/4	32	43	54	64	75	86	96	107	118	129
30	3/4	30	40	50	60	70	81	91	101	111	121
31	3/4	28	38	47	57	66	76	85	95	104	114
32	3/4	27	36	45	54	63	71	80	89	98	107
33	3/4	25	34	42	51	59	68	76	84	93	101
34	3/4	24	32	40	48	56	64	72	80	88	96
35	3/4	23	30	38	45	53	61	68	76	83	91
36	3/4	22	29	36	43	50	57	65	72	79	86
37	3/4	20	27	34	41	48	55	61	68	75	82
38	3/4	20	26	33	39	46	52	59	65	72	78
39	3/4	19	25	31	37	43	50	56	62	68	74
40	3/4	18	24	30	35	41	47	53	59	65	71

For SI: 1 inch = 25.4 mm, 1 foot = 304.8 mm, 1 pound per square inch = 6.895 kPa, 1 gallon per minute = 0.963 L/s.
a. Flow rate from Section P2904.4.2.

DRAFT

TABLE P2904.6.2(7)
ALLOWABLE PIPE LENGTH FOR 1-INCH CPVC PIPE

SPRINKLER FLOW RATE[a] (gpm)	WATER DISTRIBUTION SIZE (inch)	AVAILABLE PRESSURE—P_t (psi)									
		15	20	25	30	35	40	45	50	55	60
		Allowable length of pipe from service valve to farthest sprinkler (feet)									
8	1	1049	1398	1748	2098	2447	2797	3146	3496	3845	4195
9	1	843	1125	1406	1687	1968	2249	2530	2811	3093	3374
10	1	694	925	1157	1388	1619	1851	2082	2314	2545	2776
11	1	582	776	970	1164	1358	1552	1746	1940	2133	2327
12	1	495	660	826	991	1156	1321	1486	1651	1816	1981
13	1	427	570	712	854	997	1139	1281	1424	1566	1709
14	1	372	497	621	745	869	993	1117	1241	1366	1490
15	1	328	437	546	656	765	874	983	1093	1202	1311
16	1	291	388	485	582	679	776	873	970	1067	1164
17	1	260	347	433	520	607	693	780	867	954	1040
18	1	234	312	390	468	546	624	702	780	858	936
19	1	212	282	353	423	494	565	635	706	776	847
20	1	193	257	321	385	449	513	578	642	706	770
21	1	176	235	293	352	410	469	528	586	645	704
22	1	161	215	269	323	377	430	484	538	592	646
23	1	149	198	248	297	347	396	446	496	545	595
24	1	137	183	229	275	321	366	412	458	504	550
25	1	127	170	212	255	297	340	382	425	467	510
26	1	118	158	197	237	276	316	355	395	434	474
27	1	111	147	184	221	258	295	332	368	405	442
28	1	103	138	172	207	241	275	310	344	379	413
29	1	97	129	161	194	226	258	290	323	355	387
30	1	91	121	152	182	212	242	273	303	333	364
31	1	86	114	143	171	200	228	257	285	314	342
32	1	81	108	134	161	188	215	242	269	296	323
33	1	76	102	127	152	178	203	229	254	280	305
34	1	72	96	120	144	168	192	216	240	265	289
35	1	68	91	114	137	160	182	205	228	251	273
36	1	65	87	108	130	151	173	195	216	238	260
37	1	62	82	103	123	144	165	185	206	226	247
38	1	59	78	98	117	137	157	176	196	215	235
39	1	56	75	93	112	131	149	168	187	205	224
40	1	53	71	89	107	125	142	160	178	196	214

For SI: 1 inch = 25.4 mm, 1 foot = 304.8 mm, 1 pound per square inch = 6.895 kPa, 1 gallon per minute = 0.963 L/s.
a. Flow rate from Section P2904.4.2.

DRAFT

TABLE P2904.6.2(8)
ALLOWABLE PIPE LENGTH FOR 3/4-INCH PEX AND PE-RT TUBING

SPRINKLER FLOW RATE[a] (gpm)	WATER DISTRIBUTION SIZE (inch)	AVAILABLE PRESSURE—P_t (psi)									
		15	20	25	30	35	40	45	50	55	60
		Allowable length of pipe from service valve to farthest sprinkler (feet)									
8	3/4	93	123	154	185	216	247	278	309	339	370
9	3/4	74	99	124	149	174	199	223	248	273	298
10	3/4	61	82	102	123	143	163	184	204	225	245
11	3/4	51	68	86	103	120	137	154	171	188	205
12	3/4	44	58	73	87	102	117	131	146	160	175
13	3/4	38	50	63	75	88	101	113	126	138	151
14	3/4	33	44	55	66	77	88	99	110	121	132
15	3/4	29	39	48	58	68	77	87	96	106	116
16	3/4	26	34	43	51	60	68	77	86	94	103
17	3/4	23	31	38	46	54	61	69	77	84	92
18	3/4	21	28	34	41	48	55	62	69	76	83
19	3/4	19	25	31	37	44	50	56	62	69	75
20	3/4	17	23	28	34	40	45	51	57	62	68
21	3/4	16	21	26	31	36	41	47	52	57	62
22	3/4	NP	19	24	28	33	38	43	47	52	57
23	3/4	NP	17	22	26	31	35	39	44	48	52
24	3/4	NP	16	20	24	28	32	36	40	44	49
25	3/4	NP	NP	19	22	26	30	34	37	41	45
26	3/4	NP	NP	17	21	24	28	31	35	38	42
27	3/4	NP	NP	16	20	23	26	29	33	36	39
28	3/4	NP	NP	15	18	21	24	27	30	33	36
29	3/4	NP	NP	NP	17	20	23	26	28	31	34
30	3/4	NP	NP	NP	16	19	21	24	27	29	32
31	3/4	NP	NP	NP	15	18	20	23	25	28	30
32	3/4	NP	NP	NP	NP	17	19	21	24	26	28
33	3/4	NP	NP	NP	NP	16	18	20	22	25	27
34	3/4	NP	NP	NP	NP	NP	17	19	21	23	25
35	3/4	NP	NP	NP	NP	NP	16	18	20	22	24
36	3/4	NP	NP	NP	NP	NP	15	17	19	21	23
37	3/4	NP	NP	NP	NP	NP	NP	16	18	20	22
38	3/4	NP	NP	NP	NP	NP	NP	16	17	19	21
39	3/4	NP	NP	NP	NP	NP	NP	NP	16	18	20
40	3/4	NP	NP	NP	NP	NP	NP	NP	16	17	19

For SI: 1 inch = 25.4 mm, 1 foot = 304.8 mm, 1 pound per square inch = 6.895 kPa, 1 gallon per minute = 0.963 L/s.
NP = Not Permitted.
a. Flow rate from Section P2904.4.2.

DRAFT

TABLE P2904.6.2(9)
ALLOWABLE PIPE LENGTH FOR 1-INCH PEX AND PE-RT TUBING

SPRINKLER FLOW RATE[a] (gpm)	WATER DISTRIBUTION SIZE (inch)	AVAILABLE PRESSURE—P_t (psi)									
		15	20	25	30	35	40	45	50	55	60
		Allowable length of pipe from service valve to farthest sprinkler (feet)									
8	1	314	418	523	628	732	837	941	1046	1151	1255
9	1	252	336	421	505	589	673	757	841	925	1009
10	1	208	277	346	415	485	554	623	692	761	831
11	1	174	232	290	348	406	464	522	580	638	696
12	1	148	198	247	296	346	395	445	494	543	593
13	1	128	170	213	256	298	341	383	426	469	511
14	1	111	149	186	223	260	297	334	371	409	446
15	1	98	131	163	196	229	262	294	327	360	392
16	1	87	116	145	174	203	232	261	290	319	348
17	1	78	104	130	156	182	208	233	259	285	311
18	1	70	93	117	140	163	187	210	233	257	280
19	1	63	84	106	127	148	169	190	211	232	253
20	1	58	77	96	115	134	154	173	192	211	230
21	1	53	70	88	105	123	140	158	175	193	211
22	1	48	64	80	97	113	129	145	161	177	193
23	1	44	59	74	89	104	119	133	148	163	178
24	1	41	55	69	82	96	110	123	137	151	164
25	1	38	51	64	76	89	102	114	127	140	152
26	1	35	47	59	71	83	95	106	118	130	142
27	1	33	44	55	66	77	88	99	110	121	132
28	1	31	41	52	62	72	82	93	103	113	124
29	1	29	39	48	58	68	77	87	97	106	116
30	1	27	36	45	54	63	73	82	91	100	109
31	1	26	34	43	51	60	68	77	85	94	102
32	1	24	32	40	48	56	64	72	80	89	97
33	1	23	30	38	46	53	61	68	76	84	91
34	1	22	29	36	43	50	58	65	72	79	86
35	1	20	27	34	41	48	55	61	68	75	82
36	1	19	26	32	39	45	52	58	65	71	78
37	1	18	25	31	37	43	49	55	62	68	74
38	1	18	23	29	35	41	47	53	59	64	70
39	1	17	22	28	33	39	45	50	56	61	67
40	1	16	21	27	32	37	43	48	53	59	64

For SI: 1 inch = 25.4 mm, 1 foot = 304.8 mm, 1 pound per square inch = 6.895 kPa, 1 gallon per minute = 0.963 L/s.
a. Flow rate from Section P2904.4.2.

DRAFT

P2904.6.2.2 Calculation procedure. Determination of the required size for water distribution piping shall be in accordance with the following procedure:

Step 1—Determine P_{sup}

Obtain the static supply pressure that will be available from the water main from the water purveyor, or for an individual source, the available supply pressure shall be in accordance with Section P2904.5.1.

Step 2—Determine PL_{svc}

Use Table P2904.6.2(1) to determine the pressure loss in the water service pipe based on the selected size of the water service.

Step 3—Determine PL_m

Use Table P2904.6.2(2) to determine the pressure loss from the water meter, based on the selected water meter size.

Step 4—Determine PL_d

Determine the pressure loss from devices other than the water meter installed in the piping system supplying sprinklers, such as pressure-reducing valves, backflow preventers, water softeners or water filters. Device pressure losses shall be based on the device manufacturer's specifications. The flow rate used to determine pressure loss shall be the rate from Section P2904.4.2, except that 5 gpm (0.3 L/s) shall be added where the device is installed in a water service pipe that supplies more than one *dwelling*. As an alternative to deducting pressure loss for a device, an automatic bypass valve shall be installed to divert flow around the device when a sprinkler activates.

Step 5—Determine PL_e

Use Table P2904.6.2(3) to determine the pressure loss associated with changes in elevation. The elevation used in applying the table shall be the difference between the elevation where the water source pressure was measured and the elevation of the highest sprinkler.

Step 6—Determine P_{sp}

Determine the maximum pressure required by any individual sprinkler based on the flow rate from Section P2904.4.1. The required pressure is provided in the sprinkler manufacturer's published data for the specific sprinkler model based on the selected flow rate.

Step 7—Calculate P_t

Using Equation 29-1, calculate the pressure available to offset friction loss in water-distribution piping between the service valve and the sprinklers.

Step 8—Determine the maximum allowable pipe length

Use Tables P2904.6.2(4) through P2904.6.2(9) to select a material and size for water distribution piping. The piping material and size shall be acceptable if the *developed length* of pipe between the service valve and the most remote sprinkler does not exceed the maximum allowable length specified by the applicable table. Interpolation of P_t between the tabular values shall be permitted.

The maximum allowable length of piping in Tables P2904.6.2(4) through P2904.6.2(9) incorporates an adjustment for pipe fittings. Additional consideration of friction losses associated with pipe fittings shall not be required.

P2904.7 Instructions and signs. An owner's manual for the fire sprinkler system shall be provided to the owner. A sign or valve tag shall be installed at the main shutoff valve to the water distribution system stating the following: "Warning, the water system for this home supplies fire sprinklers that require certain flows and pressures to fight a fire. Devices that restrict the flow or decrease the pressure or automatically shut off the water to the fire sprinkler system, such as water softeners, filtration systems and automatic shutoff valves, shall not be added to this system without a review of the fire sprinkler system by a fire protection specialist. Do not remove this sign."

P2904.8 Inspections. The water distribution system shall be inspected in accordance with Sections P2904.8.1 and P2904.8.2.

P2904.8.1 Preconcealment inspection. The following items shall be verified prior to the concealment of any sprinkler system piping:

1. Sprinklers are installed in all areas as required by Section P2904.1.1.
2. Where sprinkler water spray patterns are obstructed by construction features, luminaires or ceiling fans, additional sprinklers are installed as required by Section P2904.2.4.2.
3. Sprinklers are the correct temperature rating and are installed at or beyond the required separation distances from heat sources as required by Sections P2904.2.1 and P2904.2.2.
4. The pipe size equals or exceeds the size used in applying Tables P2904.6.2(4) through P2904.6.2(9) or, if the piping system was hydraulically calculated in accordance with Section P2904.6.1, the size used in the hydraulic calculation.
5. The pipe length does not exceed the length permitted by Tables P2904.6.2(4) through P2904.6.2(9) or, if the piping system was hydraulically calculated in accordance with Section P2904.6.1, pipe lengths and fittings do not exceed those used in the hydraulic calculation.
6. Nonmetallic piping that conveys water to sprinklers is *listed* for use with fire sprinklers.
7. Piping is supported in accordance with the pipe manufacturer's and sprinkler manufacturer's installation instructions.
8. The piping system is tested in accordance with Section P2503.7.

P2904.8.2 Final inspection. The following items shall be verified upon completion of the system:

1. Sprinklers are not painted, damaged or otherwise hindered from operation.

DRAFT

2. Where a pump is required to provide water to the system, the pump starts automatically upon system water demand.
3. Pressure-reducing valves, water softeners, water filters or other impairments to water flow that were not part of the original design have not been installed.
4. The sign or valve tag required by Section P2904.7 is installed and the owner's manual for the system is present.

DRAFT

ACI—continued

332—14: Residential Code Requirements for Structural Concrete
R402.2, R403.1, R404.1.3, R404.1.3.4, R404.1.4.2, R506.1

AISI

American Iron and Steel Institute
25 Massachusetts Avenue, NW Suite 800
Washington, DC 20001

AISI S100—16: North American Specification for the Design of Cold-formed Steel Structural Members, 2016
R608.9.2, R608.9.3

AISI S220—15: North American Standard for Cold-formed Steel Framing—Nonstructural Members, 2015
R702.3.3

AISI S230—15: Standard for Cold-formed Steel Framing—Prescriptive Method for One- and Two-family Dwellings, 2015
R301.1.1, R301.2.1.1, R301.2.2.7, R301.2.2.8, R603.6, R603.9.4.1, R603.9.4.2, R608.9.2, R608.9.3, Figure 608.9(11), R608.10

AISI S240—15: North American Standard for Cold-Formed Steel Structural Framing
R505.1.3, R603.6, R702.3.3, R804.3.6

AMCA

Air Movement and Control Association International
30 West University Drive
Arlington Heights, IL 60004

ANSI/AMCA 210-ANSI/ASHRAE 51—07: Laboratory Methods of Testing Fans for Aerodynamic Performance Rating
Table M1505.3

ANCE

Association of the Electric Sector
Av. Lázaro Cardenas No. 869
Col. Nueva Industrial Vallejo
C.P. 07700 México D.F.

NMX-J-521/2-40-ANCE—((~~2014~~)) 2019/CAN/CSA-22.2 No. 60335-2-40—((~~12~~)) 19/UL 60335-2-40-2019: ((~~Safety of~~)) Household and Similar Electric Appliances ((~~,~~)) – Part 2-40: Particular Requirements for Heat Pumps, Air-Conditioners and Dehumidifiers
M1403.1, M1412.1, M1413.1

ANSI

American National Standards Institute
25 West 43rd Street, 4th Floor
New York, NY 10036

A108.1A—16: Installation of Ceramic Tile in the Wet-set Method, with Portland Cement Mortar
R702.4.1

A108.1B—99: Installation of Ceramic Tile, Quarry Tile on a Cured Portland Cement Mortar Setting Bed with Dry-set or Latex Portland Mortar
R702.4.1

A108.4—99: Installation of Ceramic Tile with Organic Adhesives or Water-Cleanable Tile-setting Epoxy Adhesive
R702.4.1

A108.5—99: Installation of Ceramic Tile with Dry-set Portland Cement Mortar or Latex Portland Cement Mortar
R702.4.1

A108.6—99: Installation of Ceramic Tile with Chemical-resistant, Water-cleanable Tile-setting and -grouting Epoxy
R702.4.1

A108.11—99: Interior Installation of Cementitious Backer Units
R702.4.1

ANSI 117—2015: Standard Specifications for Structural Glued Laminated Timber of Softwood Species
R502.1.3, R602.1.3, R802.1.3

A118.1—16: American National Standard Specifications for Dry-set Portland Cement Mortar
R702.4.1

DRAFT

ANSI—continued

A118.3—13: American National Standard Specifications for Chemical-resistant, Water-cleanable Tile-setting and -grouting Epoxy, and Water-cleanable Tile-setting Epoxy Adhesive
R702.4.1

A118.4—16: American National Standard Specifications for Modified Dry-Set Cement Mortar
R606.2.11

A118.10—99: Specification for Load-bearing, Bonded, Waterproof Membranes for Thin-set Ceramic Tile and Dimension Stone Installation
P2709.2, P2709.2.4

A136.1—08: American National Standard Specifications for Organic Adhesives for Installation of Ceramic Tile
R702.4.1

A137.1—17: American National Standard Specifications for Ceramic Tile
R702.4.1

LC1/CSA 6.26—((~~13~~)) 18: Fuel Gas Piping Systems Using Corrugated Stainless Steel Tubing (CSST)
G2414.5.4, G2411.3, G2415.5

LC4/CSA 6.32—12: Press-connect Metallic Fittings for Use in Fuel Gas Distribution Systems
G2414.10.1, G2414.10.2, G2414.10.3, G2415.5

Z21.1—2010: Household Cooking Gas Appliances
G2447.1, M1503.2

Z21.5.1/CSA 7.1—14: Gas Clothes Dryers—Volume I—Type I Clothes Dryers
G2438.1

Z21.8—94 (R2002): Installation of Domestic Gas Conversion Burners
G2443.1

Z21.10.1/CSA 4.1—12: Gas Water Heaters—Volume I—Storage Water Heaters with Input Ratings of 75,000 Btu per hour or Less
G2448.1

Z21.10.3/CSA 4.3—11: Gas Water Heaters—Volume III—Storage Water Heaters with Input Ratings above 75,000 Btu per hour, Circulating and Instantaneous
G2448.1

Z21.11.2—11: Gas-fired Room Heaters—Volume II—Unvented Room Heaters
G2445.1

Z21.13/CSA 4.9—11: Gas-fired Low-pressure Steam and Hot Water Boilers
G2452.1

Z21.15/CSA 9.1—09: Manually Operated Gas Valves for Appliances, Appliance Connector Valves and Hose End Valves
Table G2420.1.1

Z21.22—99 (R2003): Relief Valves for Hot Water Supply Systems—with Addenda Z21.22a—2000 (R2003) and 21.22b—2001 (R2003)
P2804.2, P2804.7

Z21.24/CSA 6.10—06: Connectors for Gas Appliances
G2422.1, G2422.2

Z21.40.1/CSA 2.91—96 (R2011): Gas-fired, Heat-activated Air-conditioning and Heat Pump Appliances
G2449.1

Z21.40.2/CSA 2.92—96 (R2011): Air-conditioning and Heat Pump Appliances (Thermal Combustion)
G2449.1

Z21.42—2014: Gas-fired Illuminating Appliances
G2450.1

Z21.47/CSA 2.3—12: Gas-fired Central Furnaces
G2442.1

Z21.50/CSA 2.22—16: Vented Gas Fireplaces
G2434.1

Z21.54—2009: Gas Hose Connectors for Portable Outdoor Gas-fired Appliances
G2422.1

Z21.56/CSA 4.7—17: Gas-fired Pool Heaters
G2441.1

DRAFT

APSP

The Association of Pool & Spa Professionals
211 Eisenhower Avenue, Suite 500
Alexander, VA 22314

ANSI/APSP/ICC 14—2014: American National Standard for Portable Electric Spa Energy Efficiency
N1103.11

ANSI/APSP/ICC 15a—2011: American National Standard for Residential Swimming Pool and Spa Energy Efficiency—includes Appendix A Approved January 9, 2013
N1103.12

ASCE/SEI

American Society of Civil Engineers
Structural Engineering Institute
1801 Alexander Bell Drive
Reston, VA 20191-4400

7—16: Minimum Design Loads and Associated Criteria for Buildings and Other Structures
R301.2.1.1, R301.2.1.2, R301.2.1.2.1, R301.2.1.5, R301.2.1.5.1, Table R608.6(1), Table R608.6(2), Table R608.6(3), Table R608.6(4), Table R608.7(1A), Table R608.7(1B), Table R608.7(1C), R608.9.2, R608.9.3, R609.2, R609.6.2, AH107.4.3

24—14: Flood-resistant Design and Construction
R301.2.4, R301.2.4.1, R322.1, R322.1.1, R322.1.6, R322.1.9, R322.2.2, R322.3.3

32—01: Design and Construction of Frost-protected Shallow Foundations
R403.1.4.1

ASHRAE

ASHRAE
1791 Tullie Circle NE
Atlanta, GA 30329

ASHRAE—2001: 2001 ASHRAE Handbook of Fundamentals
Table N1105.5.2(1)

ASHRAE—2017: ASHRAE Handbook of Fundamentals
N1102.1.5, P3001.2, P3101.4

ASHRAE 193—2010(RA 2014): Method of Test for Determining Air Tightness of HVAC Equipment
N1103.3.2.1

34—((~~2016~~)) 2019: Designation and Safety Classification of Refrigerants
M1411.1

ASME

American Society of Mechanical Engineers
Two Park Avenue
New York, NY 10016-5990

ASME A17.1—2016/CSA B44—16: Safety Code for Elevators and Escalators
R321.1

A18.1—2014: Safety Standard for Platforms and Stairway Chair Lifts
R321.2

A112.1.2—2012: Air Gaps in Plumbing Systems (For Plumbing Fixtures and Water Connected Receptors)
P2717.1, Table P2902.3, P2902.3.1

A112.1.3—2000 (Reaffirmed 2015): Air Gap Fittings for Use with Plumbing Fixtures, Appliances and Appurtenances
Table P2701.1, P2717.1, Table P2902.3, P2902.3.1

A112.3.1—2007(R2012): Stainless Steel Drainage Systems for Sanitary, DWV, Storm and Vacuum Applications Above and Below Ground
Table P3002.1(1), Table P3002.1(2), Table P3002.2, Table P3002.3, Table P3302.1

A112.3.4—2013/CSA B45.9—13: Macerating Toilet Systems and Related Components
Table P2701.1, P3007.5

DRAFT

ASTM—continued

D7793—13: Standard Specification for Insulated Vinyl Siding
R703.13, Table R703.3(1)

E84—2016: Standard Test Method for Surface Burning Characteristics of Building Materials
R202, R302.9.3, R302.9.4, R302.10.1, R302.10.2, R316.3, R316.5.9, R316.5.11, R507.2.2.2, R703.14.3, R802.1.5, M1601.3, M1601.5.2, P2801.6

E96/E96M—2015: Test Method for Water Vapor Transmission of Materials
R202, Table R806.5, M1411.6, M1601.4.6

E108—2016: Test Methods for Fire Tests of Roof Coverings
R302.2.4, R902.1

E119—2016: Test Methods for Fire Tests of Building Construction and Materials
Table R302.1(1), Table R302.1(2), R302.2.1, R302.2.2, R302.3, R302.4.1, R302.11.1, R606.2.2

E136—2016: Test Method for Behavior of Materials in a Vertical Tube Furnace at 750°C
R202, R302.11

E283—04(2012): Test Method for Determining the Rate of Air Leakage through Exterior Windows, Curtain Walls and Doors Under Specified Pressure Differences across the Specimen
R202, N1102.4.5

E330/E330M—14: Test Method for Structural Performance of Exterior Windows, Curtain Walls and Doors by Uniform Static Air Pressure Difference
R609.4, R609.5, R609.6.2, R703.1.2

E331—00(2009): Test Method for Water Penetration of Exterior Windows, Skylights, Doors and Curtain Walls by Uniform Static Air Pressure Difference
R703.1.1

E779—10: Standard Test Method for Determining Air Leakage Rate by Fan Pressurization
N1102.4.1.2

E814—2013A: Standard Test Method for Fire Tests of Penetration Firestop Systems
R302.4.1.2

E970—14: Standard Test Method for Critical Radiant Flux of Exposed Attic Floor Insulation Using a Radiant Heat Energy Source
R302.10.5

E1509—12: Standard Specification for Room Heaters, Pellet Fuel-burning Type
M1410.1

E1602—03(2010)e1: Guide for Construction of Solid Fuel Burning Masonry Heaters
R1002.2

E1827—11: Standard Test Methods for Determining Airtightness of Building Using an Orifice Blower Door
N1102.4.1.2

E1886—13A: Test Method for Performance Impact Protective Systems Impacted by Missile(s) and Exposed to Cyclic Pressure Differentials
R301.2.1.2, R609.6.1, R609.6.2, Table R703.11.2

E1996—2014a: Standard Specification for Performance of Exterior Windows, Curtain Walls, Doors and Impact Protective Systems Impacted by Windborne Debris in Hurricanes
R301.2.1.2, R301.2.1.2.1, R609.6.1, R609.6.2

E2178—2013: Standard Test Method for Air Permeance of Building Materials
R202

E2231—15: Standard Practice for Specimen Preparation and Mounting of Pipe and Duct Insulation Materials to Assess Surface Burning Characteristics
M1601.3

E2556/E2556M—10: Standard Specification for Vapor Permeable Flexible Sheet Water-resistive Barriers Intended for Mechanical Attachment

E2273—03(2011): Standard Test Method for Determining the Drainage Efficiency of Exterior Insulation and Finish Systems (EIFS) Clad Wall Assemblies
R703.9.2

E2568—09e1: Standard Specification for PB Exterior Insulation and Finish Systems
R703.9.1, R703.9.2

DRAFT

CSA—continued

B137.9—16: Polyethylene/Aluminum/Polyethylene (PE-AL-PE) Composite Pressure Pipe Systems
Table M2101.1, Table P2906.4, P9506.12.1

B137.10—13: Cross-linked Polyethylene/Aluminum/Cross-linked Polyethylene (PE-AL-PE) Composite Pressure Pipe Systems
Table M2101.1, Table P2906.4, Table P2906.5, Table P2906.6, P2906.12.1

B137.11—16: Polypropylene (PP-R) Pipe and Fittings for Pressure Applications
Table P2906.4, Table P2906.5, Table P2906.6, Table AG101.1

B137.18—13: Polyethylene of Raised Temperature (PE-RT) Tubing Systems for Pressure Applications
Table M2101.1, Table M2105.4, Table M2105.5, Table P2906.4, Table P2906.5, Table P2906.6

B181.1—15: Acrylonitrile-butadiene-styrene (ABS) Drain, Waste and Vent Pipe and Pipe Fittings
Table P3002.1(1), Table P3002.1(2), Table P3002.3, P3003.3.2

B181.2—15: Polyvinylchloride (PVC) and chlorinated polyvinylchloride (CPVC) Drain, Waste and Vent Pipe and Pipe Fittings
Table P3002.1(1), Table P3002.1(2), P3003.9.2, P3008.3

B181.3—15: Polyolefin and polyvinylidene (PVDF) Laboratory Drainage Systems
Table P3002.1(1), Table P3002.1(2), Table P3002.2, Table P3002.3, P3003.11.1

B182.2—11: PSM Type polyvinylchloride (PVC) Sewer Pipe and Fittings
Table P3002.2, Table P3302.1

B182.4—15: Profile polyvinylchloride (PVC) Sewer Pipe & Fittings
Table P3002.2, Table P3302.1

B182.6—15: Profile Polyethylene (PE) Sewer Pipe and Fittings for leak-proof Sewer Applications
Table P3302.1

B182.8—15: Profile Polyethylene (PE) Storm Sewer and Drainage Pipe and Fittings
Table P3302.1

B356—10: Water Pressure Reducing Valves for Domestic Water Supply Systems
P2903.3.1

B483.1—07(R2012): Drinking Water Treatment Systems
P2909.1, P2909.2

B602—15: Mechanical Couplings for Drain, Waste and Vent Pipe and Sewer Pipe
P3003.3.1, P3003.4.3,P3003.5, P3003.9.1, P3003.10, P3003.12.2, P3003.13

CSA B45.5—17/IAPMO Z124—17: Plastic Plumbing Fixtures
Table P2701.1, P2711.1, P2711.2, P2712.1

C22.2 No. 218.1—M89(R2011): Spas, Hot Tubs and Associated Equipment
M2006.1

C22.2 No. 236—15: Heating and Cooling Equipment
M2006.1

CSA C448 Series—16: Design and Installation of Earth Energy Systems
Table M2105.4, Table M2105.5

CSA O325—07: Construction Sheathing
R503.2.1, R602.1.8, R604.1, R803.2.1

O437-Series—93: Standards on OSB and Waferboard (Reaffirmed 2006)
R503.2.1, R602.1.8, R604.1, R803.2.1

CAN/CSA/C22.2 No. 60335-2-40—((~~2012~~)) 2019: ((~~Safety of~~)) Household and Similar Electrical Appliances, Part 2-40 ((~~:~~)) – Safety: Particular Requirements for Electrical Heat Pumps, Air-Conditioners and Dehumidifiers
((~~M1403.1, M1412.1, M1413.1~~)) M2006.1

CSSB

Cedar Shake & Shingle Bureau
P.O. Box 1178
Sumas, WA 98295-1178

CSSB—97: Grading and Packing Rules for Western Red Cedar Shakes and Western Red Shingles of the Cedar Shake and Shingle Bureau
R702.6, R703.6

DRAFT

UL—continued

1563—2009: Standard for Electric Spas, Hot Tubs and Associated Equipment—with revisions through March 2015
M2006.1

1618—09: Wall Protectors, Floor Protectors, and Hearth Extensions—with revisions through October 2015
R1004.2, M1410.2

1693—2010: Electric Radiant Heating Panels and Heating Panel Sets—with revisions through October 2011
M1406.1

1703—02: Flat-plate Photovoltaic Modules and Panels—with revisions through October 2015
R324.3.1, R902.4, R905.16.4, R907.17.5

1715—97: Fire Test of Interior Finish Material—with revisions through January 2013
R316.6

1738—2010: Venting Systems for Gas-burning Appliances, Categories II, III and IV—with revisions through November 2014
G2426.1, G2427.4.1, G2427.4.1.1, G2427.4.2

1741—2010: Inverters, Converters, Controllers and Interconnection System Equipment with Distributed Energy Resources—with revisions through January 2015
R324.3.1, R327.4

1777—07: Chimney Liners—with revisions through October 2015
R1003.11.1, R1003.18, G2425.12, G2425.15.4, M1801.3.4, G2427.5.1, G2427.5.2

1897—12: Uplift Tests for Roof Covering Systems—with revisions through September 2015
R905.17.7

1995—2011: Heating and Cooling Equipment—with revisions through July 2015
M1402.1, M1403.1, M1407.1, M1412.1, M1413.1, M2006.1

1996—2009: Electric Duct Heaters—with revisions through June 2014
M1402.1, M1407.1

2034—08: Standard for Single- and Multiple-station Carbon Monoxide Alarms—with revisions through March 2015
R314.1.1, R315.1.1

2075—2013: Standard for Gas and Vapor Detectors and Sensors
R314.7.4, R315.7.1, R315.7.4

2158A—2010: Outline of Investigation for Clothes Dryer Transition Duct
M1502.4.3, G2439.7.3

2523—09: Standard for Solid Fuel-fired Hydronic Heating Appliances, Water Heaters and Boilers—with revisions through February 2013
M2005.1, M2001.1.1

2703—14: Mounting Systems, Mounting Devices, Clamping/Retention Devices and Ground Lugs for Use with Flat-Plate Photovoltaic Modules and Panels
R902.4

9540—14: Outline of Investigation for Energy Storage Systems and Equipment
R327.2, R327.4

UL/CSA/ANCE 60335-2-40—((~~2012~~)) 2019: ((~~Standard for~~)) Household and Similar Electrical Appliances ((~~,~~)) – Safety: Part 2-40: Particular Requirements for ((~~Motor compressors~~)) Electrical Heat Pumps, Air Conditioners and Dehumidifiers
M1403.1, M1412.1, M1413.1

ULC

ULC
13775 Commerce Parkway
Richmond, BC V6V 2V4

CAN/ULC S 102.2—2010: Standard Methods for Test for Surface Burning Characteristics of Building Materials and Assemblies
R302.10.1, R302.10.2

US-FTC

United States-Federal Trade Commission
600 Pennsylvania Avenue NW
Washington, DC 20580

CFR Title 16(2015): R-value Rule
N1101.10.4

DRAFT

APPENDICES A through E

Note: Appendices A through E are not adopted by The City of Seattle.

DRAFT

APPENDIX F

RADON CONTROL METHODS

The provisions contained in this appendix are not mandatory unless specifically referenced in the adopting ordinance.

User note:

About this appendix: *Appendix F contains provisions that are intended to mitigate the transfer of radon gases from the soil into dwelling units. Radon is a radioactive gas that has been identified as a cancer-causing agent. Radon comes from the natural breakdown of uranium in soil, rock and water.*

SECTION AF101
SCOPE

AF101.1 General. This appendix contains requirements for new construction in *jurisdictions* where radon-resistant construction is required.

Inclusion of this appendix by jurisdictions shall be determined through the use of locally available data or determination of Zone 1 designation in Figure AF101 and Table AF101(1).

DRAFT

SECTION AF102
DEFINITIONS

AF102.1 General. For the purpose of these requirements, the terms used shall be defined as follows:

DRAIN TILE LOOP. A continuous length of drain tile or perforated pipe extending around all or part of the internal or external perimeter of a *basement* or crawl space footing.

RADON GAS. A naturally occurring, chemically inert, radioactive gas that is not detectable by human senses. As a gas, it can move readily through particles of soil and rock, and can accumulate under the slabs and foundations of homes where it can easily enter into the living space through construction cracks and openings.

SOIL-GAS-RETARDER. A continuous membrane of 6-mil (0.15 mm) polyethylene or other equivalent material used to retard the flow of soil gases into a building.

SUBMEMBRANE DEPRESSURIZATION SYSTEM. A system designed to achieve lower submembrane air pressure relative to crawl space air pressure by use of a vent drawing air from beneath the soil-gas-retarder membrane.

SUBSLAB DEPRESSURIZATION SYSTEM (Active). A system designed to achieve lower subslab air pressure relative to indoor air pressure by use of a fan-powered vent drawing air from beneath the slab.

SUBSLAB DEPRESSURIZATION SYSTEM (Passive). A system designed to achieve lower subslab air pressure relative to indoor air pressure by use of a vent pipe routed through the *conditioned space* of a building and connecting the subslab area with outdoor air, thereby relying on the convective flow of air upward in the vent to draw air from beneath the slab.

SECTION AF103
REQUIREMENTS

[W] AF103.1 General. The following construction techniques are intended to resist radon entry and prepare the building for post-construction radon mitigation, if necessary (see Figure AF103). These techniques are required in ((~~areas~~)) high radon potential counties where designated ((~~by the *jurisdiction*~~)) in Table AF101(1).

AF103.2 Subfloor preparation. A layer of gas-permeable material shall be placed under all concrete slabs and other floor systems that directly contact the ground and are within the walls of the living spaces of the building, to facilitate future installation of a subslab depressurization system, if needed. The gas-permeable layer shall consist of one of the following:

1. A uniform layer of clean aggregate, not less than 4 inches (102 mm) thick. The aggregate shall consist of material that will pass through a 2-inch (51 mm) sieve and be retained by a $^1/_4$-inch (6.4 mm) sieve.
2. A uniform layer of sand (native or fill), not less than 4 inches (102 mm) thick, overlain by a layer or strips of geotextile drainage matting designed to allow the lateral flow of soil gases.
3. Other materials, systems or floor designs with demonstrated capability to permit depressurization across the entire subfloor area.

APPENDICES G through P

Note: Appendices G through P are not adopted by The City of Seattle.

DRAFT

APPENDIX Q

TINY HOUSES

This provisions contained in this appendix are not mandatory unless specifically referenced in the adopting ordinance.

User note:

About this appendix: *Appendix Q relaxes various requirements in the body of the code as they apply to houses that are 400 square feet in area or less. Attention is specifically paid to features such as compact stairs, including stair handrails and headroom, ladders, reduced ceiling heights in lofts and guard and emergency escape and rescue opening requirements at lofts.*

SECTION AQ101
GENERAL

AQ101.1 Scope. This appendix shall be applicable to *tiny houses* used as single *dwelling units*. *Tiny houses* shall comply with this code except as otherwise stated in this appendix.

SECTION AQ102
DEFINITIONS

AQ102.1 General. The following words and terms shall, for the purposes of this appendix, have the meanings shown herein. Refer to Chapter 2 of this code for general definitions.

[W] ((~~EGRESS ROOF ACCESS WINDOW.~~ ~~A *skylight* or roof window designed and installed to satisfy the emergency escape and rescue opening requirements of Section R310.2.~~))

[W] ((~~LANDING PLATFORM.~~ ~~A landing provided as the top step of a stairway accessing a *loft*.~~))

[W] ((~~LOFT.~~ ~~A floor level located more than 30 inches (762 mm) above the main floor, open to the main floor on one or more sides with a ceiling height of less than 6 feet 8 inches (2032 mm) and used as a living or sleeping space.~~))

[W] TINY HOUSE. A *dwelling unit* that is 400 square feet (37 m^2) or less in floor area excluding sleeping *lofts*.

SECTION AQ103
CEILING HEIGHT

[W] AQ103.1 Minimum ceiling height. *Habitable space* ((~~and hallways~~)) in *tiny houses* shall have a ceiling height of not less than 6 feet 8 inches (2032 mm). Bathrooms, toilet rooms and kitchens shall have a ceiling height of not less than 6 feet 4 inches (1930 mm). Obstructions including, but not limited to, beams, girders, ducts and lighting, shall not extend below these minimum ceiling heights.

Exception: Ceiling heights in *sleeping lofts* ((~~are permitted to~~)) shall be ((~~less than 6 feet 8 inches (2032 mm)~~)) in accordance with Section R326.

[W] SECTION AQ104
((~~LOFTS~~)) ENERGY CONSERVATION

((~~**AQ104.1 Minimum loft area and dimensions.** *Lofts* used as a sleeping or living space shall meet the minimum area and dimension requirements of Sections AQ104.1.1 through AQ104.1.3.~~

~~**AQ104.1.1 Minimum area.** *Lofts* shall have a floor area of not less than 35 square feet (3.25 m^2).~~

~~**AQ104.1.2 Minimum dimensions.** *Lofts* shall be not less than 5 feet (1524 mm) in any horizontal dimension.~~

~~**AQ104.1.3 Height effect on loft area.** Portions of a *loft* with a sloped ceiling measuring less than 3 feet (914 mm) from the finished floor to the finished ceiling shall not be considered as contributing to the minimum required area for the loft.~~

~~**Exception:** Under gable roofs with a minimum slope of 6 units vertical in 12 units horizontal (50-percent slope), portions of a *loft* with a sloped ceiling measuring less than 16 inches (406 mm) from the finished floor to the finished ceiling shall not be considered as contributing to the minimum required area for the *loft*.~~

~~**AQ104.2 Loft access.** The access to and primary egress from *lofts* shall be of any type described in Sections AQ104.2.1 through AQ104.2.4.~~

DRAFT

~~**AQ104.2.1 Stairways.** Stairways accessing *lofts* shall comply with this code or with Sections AQ104.2.1.1 through AQ104.2.1.5.~~

~~**AQ104.2.1.1 Width.** Stairways accessing a *loft* shall not be less than 17 inches (432 mm) in clear width at or above the handrail. The width below the handrail shall be not less than 20 inches (508 mm).~~

~~**AQ104.2.1.2 Headroom.** The headroom in stairways accessing a *loft* shall be not less than 6 feet 2 inches (1880 mm), as measured vertically, from a sloped line connecting the tread or landing platform nosings in the middle of their width.~~

~~**AQ104.2.1.3 Treads and risers.** Risers for stairs accessing a *loft* shall be not less than 7 inches (178 mm) and not more than 12 inches (305 mm) in height. Tread depth and riser height shall be calculated in accordance with one of the following formulas:~~

~~1. The tread depth shall be 20 inches (508 mm) minus four-thirds of the riser height.~~

~~2. The riser height shall be 15 inches (381 mm) minus three-fourths of the tread depth.~~

~~**AQ104.2.1.4 Landing platforms.** The top tread and riser of stairways accessing *lofts* shall be constructed as a *landing platform* where the *loft* ceiling height is less than 6 feet 2 inches (1880 mm) where the stairway meets the *loft*. The *landing platform* shall be 18 inches to 22 inches (457 to 559 mm) in depth measured from the nosing of the landing platform to the edge of the *loft*, and 16 to 18 inches (406 to 457 mm) in height measured from the *landing platform* to the *loft* floor.~~

~~**AQ104.2.1.5 Handrails.** Handrails shall comply with Section R311.7.8.~~

~~**AQ104.2.1.6 Stairway guards.** Guards at open sides of stairways shall comply with Section R312.1.~~

~~**AQ104.2.2 Ladders.** Ladders accessing *lofts* shall comply with Sections AQ104.2.1 and AQ104.2.2.~~

~~**AQ104.2.2.1 Size and capacity.** Ladders accessing *lofts* shall have a rung width of not less than 12 inches (305 mm), and 10-inch (254 mm) to 14-inch (356 mm) spacing between rungs. Ladders shall be capable of supporting a 200-pound (75 kg) load on any rung. Rung spacing shall be uniform within $^{3}/_{8}$ inch (9.5 mm).~~

~~**AQ104.2.2.2 Incline.** Ladders shall be installed at 70 to 80 degrees from horizontal.~~

~~**AQ104.2.3 Alternating tread devices.** Alternating tread devices accessing *lofts* shall comply with Sections R311.7.11.1 and R311.7.11.2. The clear width at and below the handrails shall be not less than 20 inches (508 mm).~~

~~**AQ104.2.4 Ship's ladders.** Ship's ladders accessing *lofts* shall comply with Sections R311.7.12.1 and R311.7.12.2. The clear width at and below handrails shall be not less than 20 inches (508 mm).~~

~~**AQ104.2.5 Loft Guards.** *Loft* guards shall be located along the open side of *lofts*. *Loft* guards shall be not less than 36 inches (914 mm) in height or one-half of the clear height to the ceiling, whichever is less.~~))

AQ104.1 Air leakage testing. The air leakage rate for tiny houses shall not exceed 0.30 cfm at 50 Pascals of pressure per feet of the dwelling unit enclosure area. Testing shall be conducted in accordance with RESNET/ICC 380, ASTM E 779 or ASTM E 1827 and reported at a pressure of 0.2 inch w.g. (50 Pascals). Where required by the code official, testing shall be conducted by an approved third party. A written report of the results of the test shall be signed by the party conducting the test and provided to the code official. Testing shall be performed after the continuous air barrier, including all penetrations, is completed and sealed.

During testing:

1. Exterior windows and doors, fireplace and stove doors shall be closed, but not sealed, beyond the intended weather stripping or other infiltration control measures.
2. Dampers including exhaust, intake, makeup air, backdraft and flue dampers shall be closed, but not sealed beyond intended infiltration control measures.
3. Interior doors, if installed at the time of the test, shall be open.
4. Exterior louvers for continuous ventilation systems and heat recovery ventilators shall be closed and sealed.
5. Heating and cooling systems, if installed at the time of the test, shall be turned off.
6. Supply and return registers, if installed at the time of the test, shall be fully open.

[W] AQ104.1.1 Whole house mechanical ventilation. Where an air leakage rate not exceeding 0.30 cfm per ft of the dwelling unit enclosure area in accordance with Section AQ106.1 is provided, the tiny house shall be provided with whole house mechanical ventilation in accordance with Section M1505.4.

DRAFT

[W] ((~~SECTION AQ105~~
~~EMERGENCY ESCAPE AND RESCUE OPENINGS~~

~~**AQ105.1 General.** *Tiny houses* shall meet the requirements of Section R310 for emergency escape and rescue openings.~~

~~**Exception:** *Egress roof access windows* in *lofts* used as sleeping rooms shall be deemed to meet the requirements of Section R310 where installed such that the bottom of the opening is not more than 44 inches (1118 mm) above the *loft* floor, provided the egress roof access window complies with the minimum opening area requirements of Section R310.2.1.~~))

DRAFT

APPENDICES R and S

Note: Appendices R and S are not adopted by The City of Seattle.

DRAFT

APPENDIX T [RE]

[W] SOLAR-READY PROVISIONS— DETACHED ONE- AND TWO-FAMILY DWELLINGS, ((~~AND~~)) MULTIPLE SINGLE-FAMILY DWELLINGS (TOWNHOUSES)

[W] ((~~*The provisions contained in this appendix are not mandatory unless specifically referenced in the adopting ordinance.*~~))

User note:

About this appendix: *Harnessing the heat or radiation from the sun's rays is a method to reduce the energy consumption of a building. Although Appendix T does not require solar systems to be installed for a building, it does require the space(s) for installing such systems, providing pathways for connections and requiring adequate structural capacity of roof systems to support solar systems.*

Section numbers in parenthesis are those in Appendix A of the residential provisions of the International Energy Conservation Code®.

SECTION T101
SCOPE

[S] T101.1 (RA101.1) General. ((~~These provisions shall be applicable for new construction where solar-ready provisions are required.~~)) New one- and two-family dwellings shall be provided with a *solar-ready zone* of not less than 300 square feet. Townhouses shall be provided with a *solar-ready zone* of not less than 150 square feet for each dwelling unit.

Exception: The following do not require *solar-ready zones:*

1. One- and two-family dwellings with less than 600 square feet of qualifying roof area conforming to the requirements of Section T101.1.1.
2. Individual units within townhouse buildings that have less than 300 square feet of qualifying roof area per unit conforming to the requirements of Section T101.1.1.
3. Buildings with permanently installed on-site renewable energy systems.

[S] T101.1.1 General. Qualifying roof area includes all roof areas other than the following:

1. Roof areas oriented within 45 degrees of true north and having slopes greater than 2:12.
2. Roof areas shaded by existing landforms, structures or trees for more than 70 percent of daylight hours annually. Shading from future tree growth need not be considered.
3. Roof areas consisting of skylights, occupied decks, or planted areas.
4. Access or set-back areas required by this code or the applicable provisions of the *International Fire Code*.

SECTION T102 (RA102)
GENERAL DEFINITION

T102.1 General. The following term shall, for the purpose of this appendix, have the meaning shown herein.

SOLAR-READY ZONE. A section or sections of the roof or building overhang designated and reserved for the future installation of a solar photovoltaic panel. ((~~or solar thermal system.~~))

SECTION T103 (RA103)
SOLAR-READY ZONE

[S] T103.1 General. ((~~New detached one- and two-family dwellings, and townhouses with not less than 600 square feet (55.74 m²) of roof area oriented between 90 degrees and 270 degrees of true north, shall comply with Sections T103.2 through T103.10.~~)) The solar-ready zone shall comply with Sections T103.1.1 through T103.1.3.

((~~**Exceptions:**~~

1. ~~New residential buildings with a permanently installed on-site renewable energy system.~~
2. ~~A building where all areas of the roof that would otherwise meet the requirements of Section T103 are in full or partial shade for more than 70 percent of daylight hours annually.~~

DRAFT

~~**T103.2 (RA103.2) Construction document requirements for solar-ready zone.** Construction documents shall indicate the solar-ready zone.~~))

[S] ((~~T103.3~~)) T103.1.1 (RA103.3) Solar-ready zone area. The ((~~total~~)) *solar-ready zone* ((~~area shall be not less than 300 square feet (27.87 m²) exclusive of mandatory access or setback areas as required by the *International Fire Code*~~)) may be comprised of one single area or of multiple separated areas. ((~~New townhouses three stories or less in height above grade plane and with a total floor area less than or equal to 2,000 square feet (185.8 m²) per dwelling shall have a solar-ready zone area of not less than 150 square feet (13.94 m²). The solar-ready zone shall be composed of areas not less than 5 feet (1524 mm) in width and not less than 80 square feet (7.44 m²) exclusive of access or set-back areas as required by the *International Fire Code*.~~)) No solar-ready zone shall be less than 5 feet in any dimension nor less than 80 square feet of contiguous area.

[S] ((~~T103.4~~)) T103.1.2 (RA103.4) Obstructions and shadows. ((~~Solar ready zones~~)) The *solar-ready zone* shall be free from obstructions, including but not limited to vents, chimneys, and roof-mounted equipment. Permanently installed objects adjacent to the *solar-ready zone* shall be located so that they do not cast shadows on the *solar-ready zone* when the sun is directly east, west, or south of the *solar-ready zone* at 45 degrees above the horizon. Such objects include but are not limited to taller portions of the building, parapets, chimneys, antennas, rooftop *equipment*, trees, and roof plantings. Shading from future tree growth need not be considered.

[S] T103.1.3 Structural support. The supporting structure of the solar-ready zone shall be designed in accordance with Section R324.4, using a minimum of 4 pounds per square foot as an assumed photovoltaic panel weight.

[S] ((~~T103.5 Shading.~~ ~~The solar-ready zone shall be set back from any existing or new, permanently affixed object on the building or site that is located south, east or west of the solar zone a distance not less than two times the object's height above the nearest point on the roof surface. Such objects include, but are not limited to, taller portions of the building itself, parapets, chimneys, antennas, signage, rooftop equipment, trees and roof plantings.~~))

[S] ((~~T103.6 Capped roof penetration sleeve.~~ ~~A capped roof penetration sleeve shall be provided adjacent to a solar-ready zone located on a roof slope of not greater than 1 unit vertical in 12 units horizontal (8 percent slope). The capped roof penetration sleeve shall be sized to accommodate the future photovoltaic system conduit, but shall have an inside diameter of not less than 1-1/4 inches (32 mm).~~))

[S] ((~~T103.7 (RA103.5) Roof load documentation.~~ ~~The structural design loads for roof dead load and roof live load shall be clearly indicated on the construction documents.~~

~~**T103.8 (RA103.6) Interconnection pathway.** Construction documents shall indicate pathways for routing of conduit or plumbing from the solar-ready zone to the electrical service panel or service hot water system.~~))

[S] ((~~T103.9~~)) T103.2 (RA103.7) Electrical service reserved space. The main electrical service panel shall have a reserved space to allow installation of a dual pole circuit breaker for future solar electric installation and shall be labeled "For Future Solar Electric." ((~~The reserved space shall be positioned at the opposite (load) end from the input feeder location or main circuit location.~~))

[S] ((~~T103.10~~)) T103.3 (RA103.8) ((~~Construction documentation certificate.~~)) Posted certificate. A permanent certificate, indicating the boundaries and structural provisions of the *solar-ready zone*, ((~~and other requirements of this section,~~)) shall be posted near the electrical distribution panel, water heater or other conspicuous location. ((~~by the builder or registered design professional.~~))

[S] T103.4 Construction documents. *Construction documents* shall indicate the boundaries and the assumed photovoltaic panel weight used for design in Section T103.1.3 for the *solar-ready zone*.

DRAFT