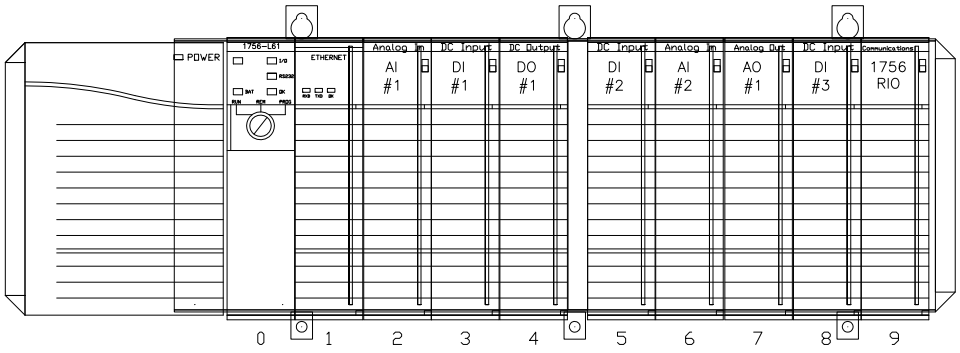

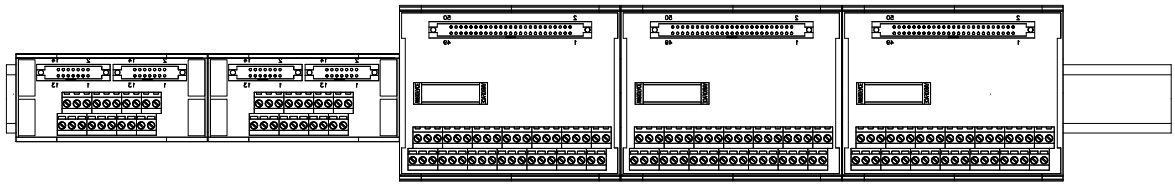

ANALOG IN
POINTS 0 – 5

ANALOG IN
POINTS 6 – 11

DESCRETE IN
POINTS 0 – 31

DESCRETE IN
POINTS 32 – 63

DESCRETE IN
POINTS 64 – 95

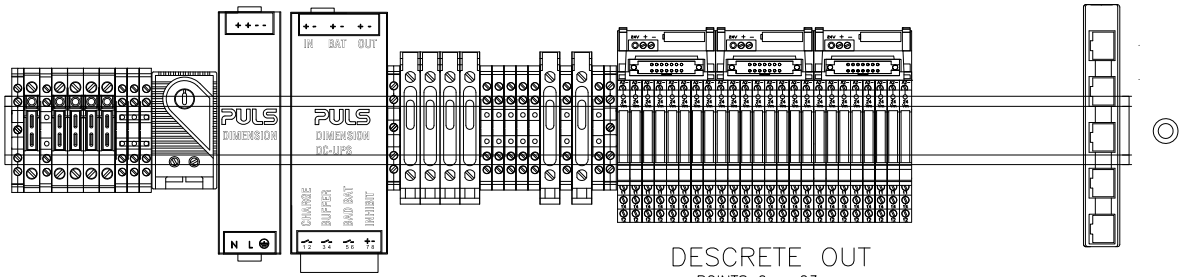

DESCRETE OUT
POINTS 0 – 23

ROUTER

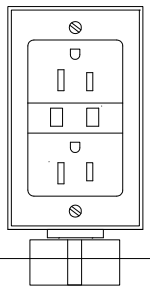

TYPICAL ALAN BRADLEY PANEL CONFIGURATION

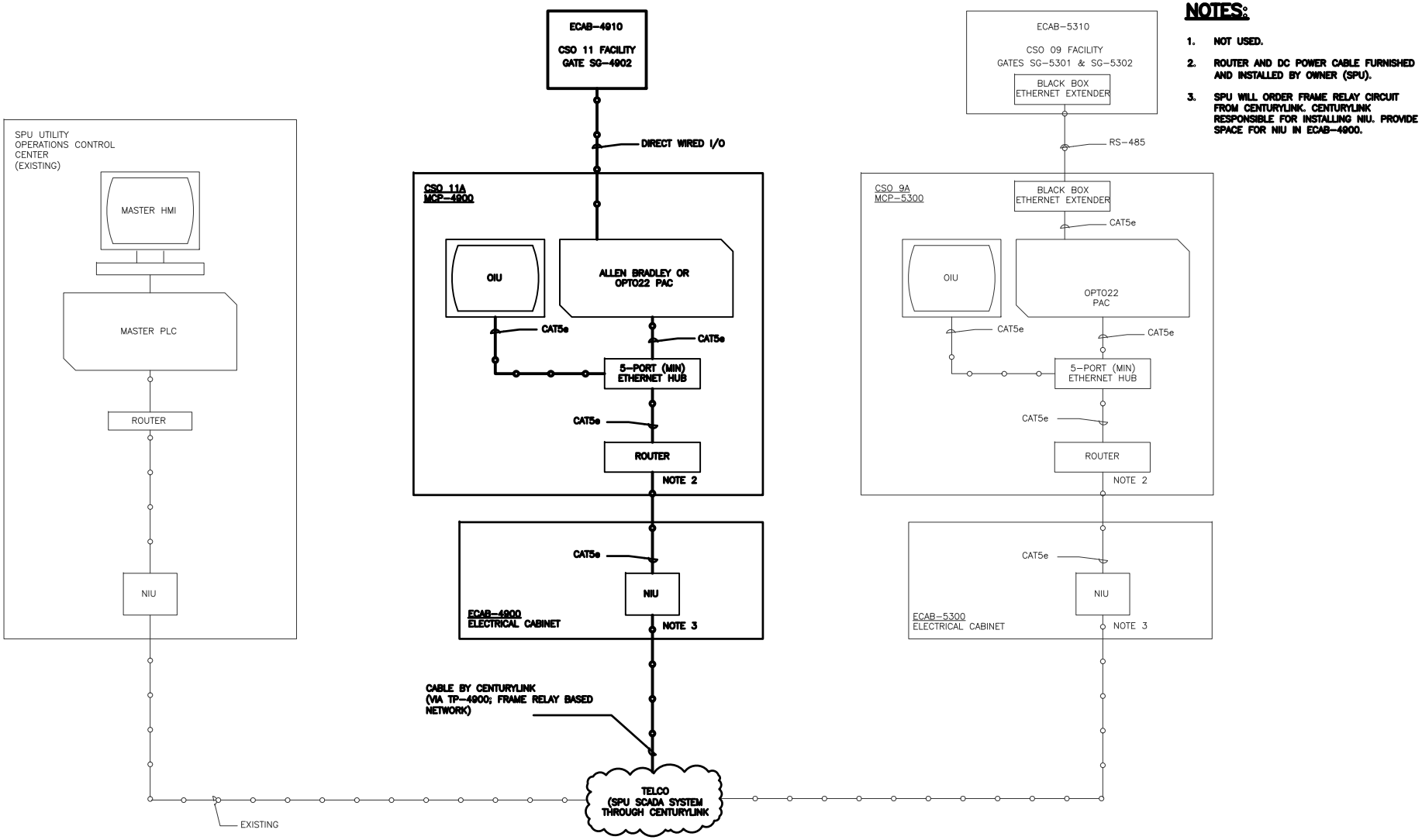

NOTES:

1. NOT USED.
2. ROUTER AND DC POWER CABLE FURNISHED AND INSTALLED BY OWNER (SPU).
3. SPU WILL ORDER FRAME RELAY CIRCUIT FROM CENTURYLINK. CENTURYLINK RESPONSIBLE FOR INSTALLING NIU. PROVIDE SPACE FOR NIU IN ECAB-4900.

TYPICAL NETWORK COMMUNICATIONS (LARGE PROJECT) 1 of 2

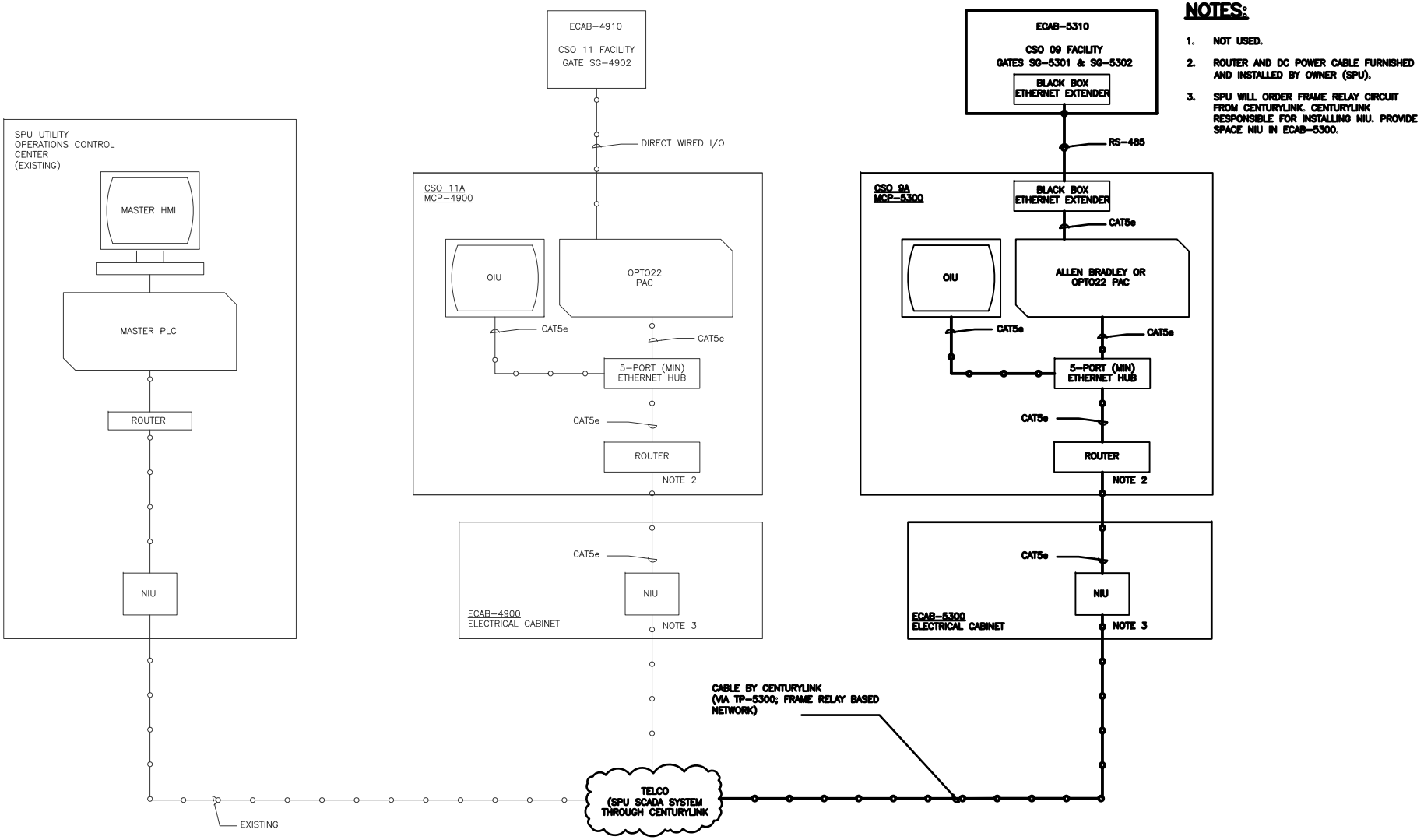

TYPICAL NETWORK COMMUNICATIONS
(LARGE PROJECT) 2 of 2

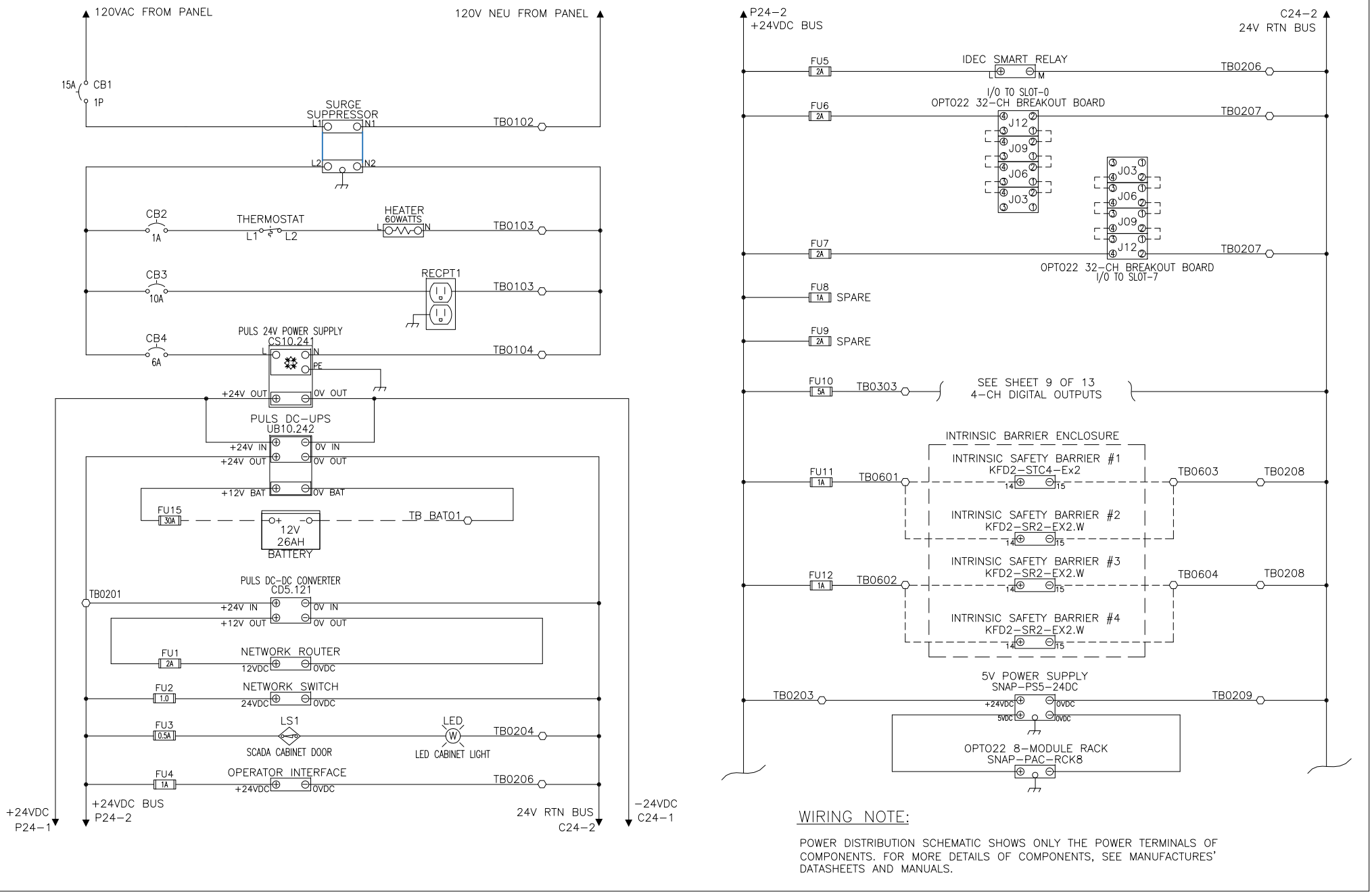

WIRING NOTE:

POWER DISTRIBUTION SCHEMATIC SHOWS ONLY THE POWER TERMINALS OF COMPONENTS. FOR MORE DETAILS OF COMPONENTS, SEE MANUFACTURES' DATASHEETS AND MANUALS.

TYPICAL POWER WIRING DIAGRAM

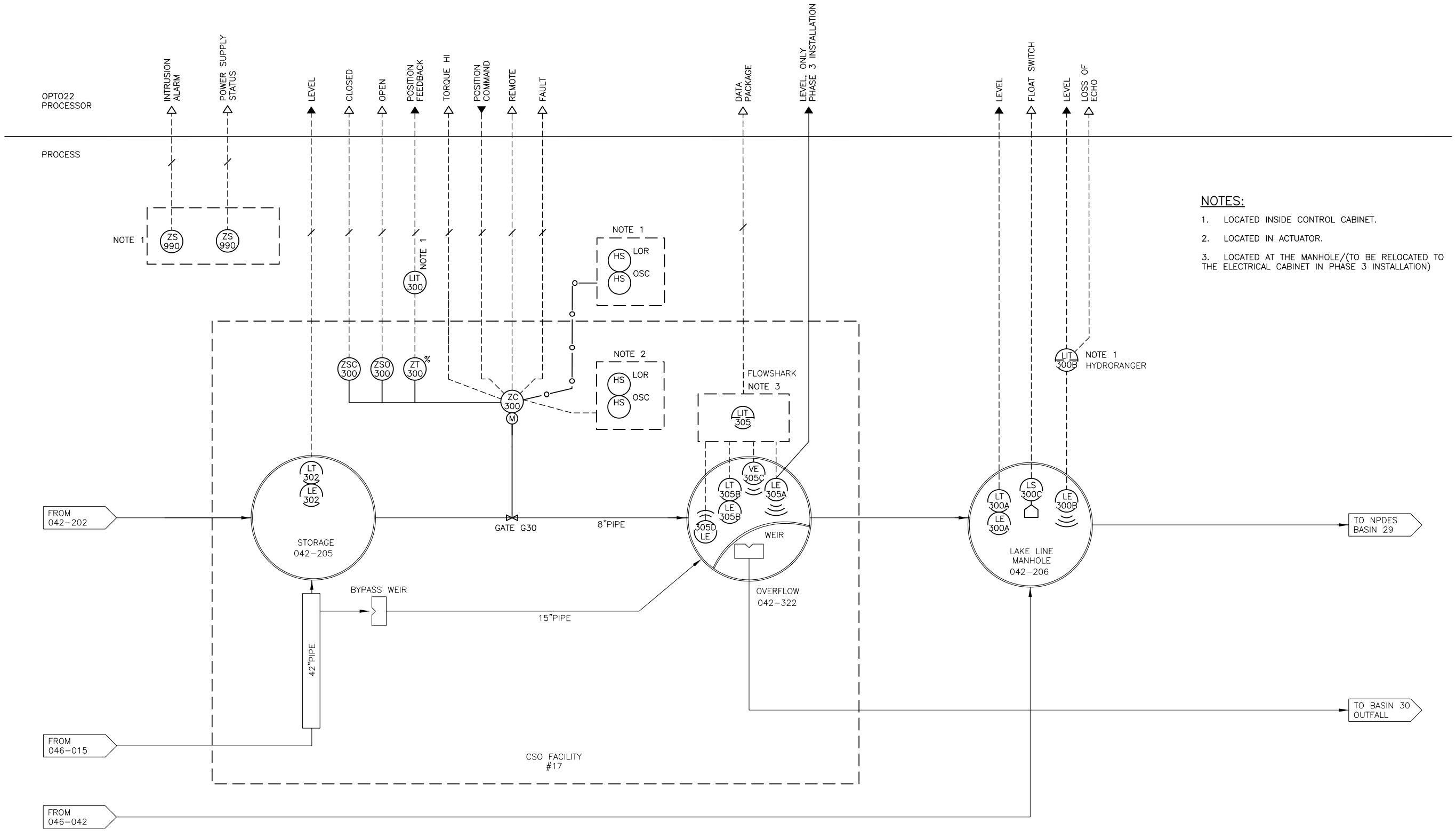

NOTES:

1. LOCATED INSIDE CONTROL CABINET.
2. LOCATED IN ACTUATOR.
3. LOCATED AT THE MANHOLE/(TO BE RELOCATED TO THE ELECTRICAL CABINET IN PHASE 3 INSTALLATION)

VAULT SERIAL NO.	DATE	MARK	NATURE REVISIONS	MADE	CHK'D	REV'D

AS-BUILT

CSO SYSTEM INSTRUMENT P&ID DIAGRAM

APPROVED FOR ADVERTISING
LINNETH RILEY-HALL
DEPARTMENT OF EXECUTIVE ADMINISTRATION
SEATTLE, WASHINGTON 20

BY:
DIRECTOR, CONTRACTING SERVICES

NAME OR INITIALS AND DATE	INITIALS AND DATE
DESIGNED CL	REVIEWED:
CHECKED TK, IS	DES. CONST.
	SDOT PROJ. MGR.
DRAWN CL	RECEIVED 05/11/2010
CHECKED TK, DP, IS, 02/28/2011	REVISED AS BUILT *REV. 2.2*

ALL WORK SHALL BE DONE IN ACCORDANCE WITH THE CITY OF SEATTLE STANDARD PLANS AND SPECIFICATIONS AND OTHER DOCUMENTS CALLED FOR IN SECTION 0-02.3 OF THE PROJECT MANUAL.

Seattle Public Utilities

City of Seattle
Ray Hoffman, Director

ORDINANCE NO.
FUND:
SCALE: AS SHOWN

APPROVED
INSPECTOR'S BOOK

LESCHI BASIN CSO SCADA INTEGRATION

JOB NO. PC C302102 R/W CO C302102
VAULT PLAN NO. ----
SHEET 3 OF 13

J:\ PWOps\WS691\Secure\SCADA Site Drawings\Riley's Working Files\P&ID\P&ID.dwg
lowthir Oct-12-16 8:10am

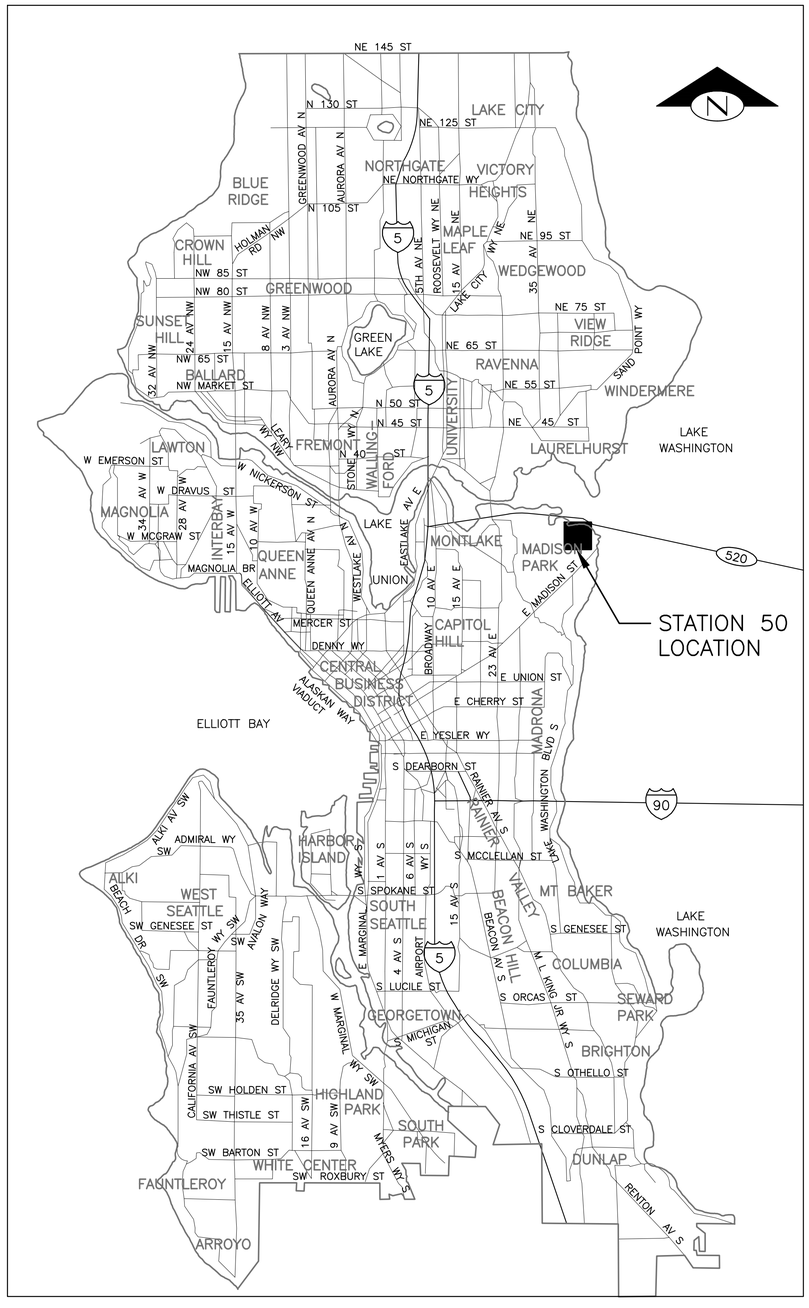

ABBREVIATION & LEGENDS:

AI01 = ANALOG INPUT MODULE AT SLOT "01"
CB1 = CIRCUIT BREAKER "1'
CM05 = COMMUNICATION MODULE AT SLOT "05"
CR1 = CONTROL RELAY '1"
CT1 = CURRENT TRANSFORMER "1"
DI00 = DIGITAL INPUT MODULE AT SLOT "00"
FU1 = FUSE TERMINAL "1"
HOA1 = HAND, OFF, AUTO KEYED SWITCH "1"
ISO1 = INTRINSIC BARRIER "01'
LS = LIMIT SWITCH
LE/LT = LEVEL ELEMENT & TRANSDUCER
LSH = LEVEL SWITCH HIGH
LSHH = LEVEL SWITCH HIGH HIGH
M1 = MOTOR STARTER CONTACTOR "1"
PR1 = POWER RELAY "1'
PFR = PHASE FAIL RELAY
P1 = PUMP #1
TB01 = TERMINAL BLOCK "01"
XOO = CLOSE, OPEN, OPEN SWITCH POSITION

= TWISTED SHIELDED PAIR
= TWISTED PAIR
= ELECTRICAL CONNECTION
#□ = ELECTRONIC COMPONENT TERMINALS
#◇ = SCADA CABINET FILED ACCESS TERMINALS
#⬡ = SCADA CABINET INTERNAL TERMINALS
——— = SCADA CABINET INTERNAL WIRING
– – – – – = SCADA CABINET FIELD WIRING

SHEET INDEX

SHEET NO.	SHEET DESCRIPTION
1	PROJECT COVER PAGE
2	SCADA PANEL DOOR LAYOUT
3	CABINET BACK PANEL LAYOUT
4	BILL OF MATERIAL SHEET 1 OF 2
5	BILL OF MATERIAL SHEET 2 OF 2
6	COMMUNICATION DIAGRAM
7	POWER DISTRIBUTION DIAGRAM
8	DIGITAL OUTPUT SCHEMATIC
9	DIGITAL INPUT SCHEMATIC SHEET 1 OF 3
10	DIGITAL INPUT SCHEMATIC SHEET 2 OF 3
11	DIGITAL INPUT SCHEMATIC SHEET 3 OF 3
12	ANALOG INPUT SCHEMATIC SHEET 1 OF 2
13	ANALOG INPUT SCHEMATIC SHEET 2 OF 2
14	TYPICAL MCC & SCADA CONTROL
15	PANEL I_O ASSIGNMENTS SHEET 1 OF 2
16	PANEL I_O ASSIGNMENTS SHEET 2 OF 2

REVISION INDEX

REVISION RECORD	RECORDED DATE	DESCRIPTIONS OF NATURE	SHEET #
A	7/14/2015	ADDED 'GO' LIGHT TO CR5	SHEET 7
B	2/22/2016	UPDATED PER PS-50 CONTRACT DRAWINGS	SHEETS 1-15
C	3/7/2016	ADDED DRYWELL EXHAUST FAN LOW AIR FLOW	SHEETS 3, 8 & 11

GENERAL NOTES

UNLESS OTHERWISE NOTED:

1. THE VICINITY MAP ONLY SHOWS PROXIMITY WASTEWATER PUMP STATION LOCATION. FOR MORE LOCATION DETAIL, CONTACT ELECTRICIAN CREW CHIEF.
2. REFER TO SPECIFIC SITE I/O ASSIGNMENT LIST FOR MORE INFORMATION.

SHOP AS-BUILT DRAWINGS REV C

PROJECT COVER PAGE

APPROVED FOR ADVERTISING
NANCY LOCKE
DEPARTMENT OF FINANCE & ADMINISTRATIVE SERVICES
SEATTLE, WASHINGTON 20
BY:
PURCHASING & CONTRACTING SERVICES DIRECTOR

INITIALS AND DATE		INITIALS AND DATE	
DESIGNED	RL	REVIEWED:	
CHECKED	IS	DES.	CONST.
		SDOT	PROJ. MGR.
DRAWN	RL	RECEIVED	
CHECKED	IS	REVISED AS BUILT 7/14/2015	

ALL WORK SHALL BE DONE IN ACCORDANCE WITH THE CITY OF SEATTLE STANDARD PLANS AND SPECIFICATIONS AND OTHER DOCUMENTS CALLED FOR IN SECTION 0-02.3 OF THE PROJECT MANUAL.

STATE OF WASHINGTON 37038 REGISTERED PROFESSIONAL ENGINEER

Seattle Public Utilities
City of Seattle
Ray Hoffman, Director

ORDINANCE NO. Ordinance Number
APPROVED
FUND: Fund
SCALE: AS SHOWN
INSPECTOR'S BOOK

PUMP STATION 050 AIRLIFT REPLACEMENT: 2534 39TH AVE. E.

JOB NO. PC C314050 R/W CO C314050
VAULT PLAN NO.
SHEET 1 OF 16

VAULT	SERIAL NO.	DATE	MARK	NATURE REVISIONS	MADE	CHK'D	REV'D

J:\FldOps\WS691\Secure\scada sites info (operational)\dww lift stations\sta50_39 ave e\airlift replacement\plot files\1 PROJECT COVER PAGE.dgn
lowlhir May-11-16 6:39am

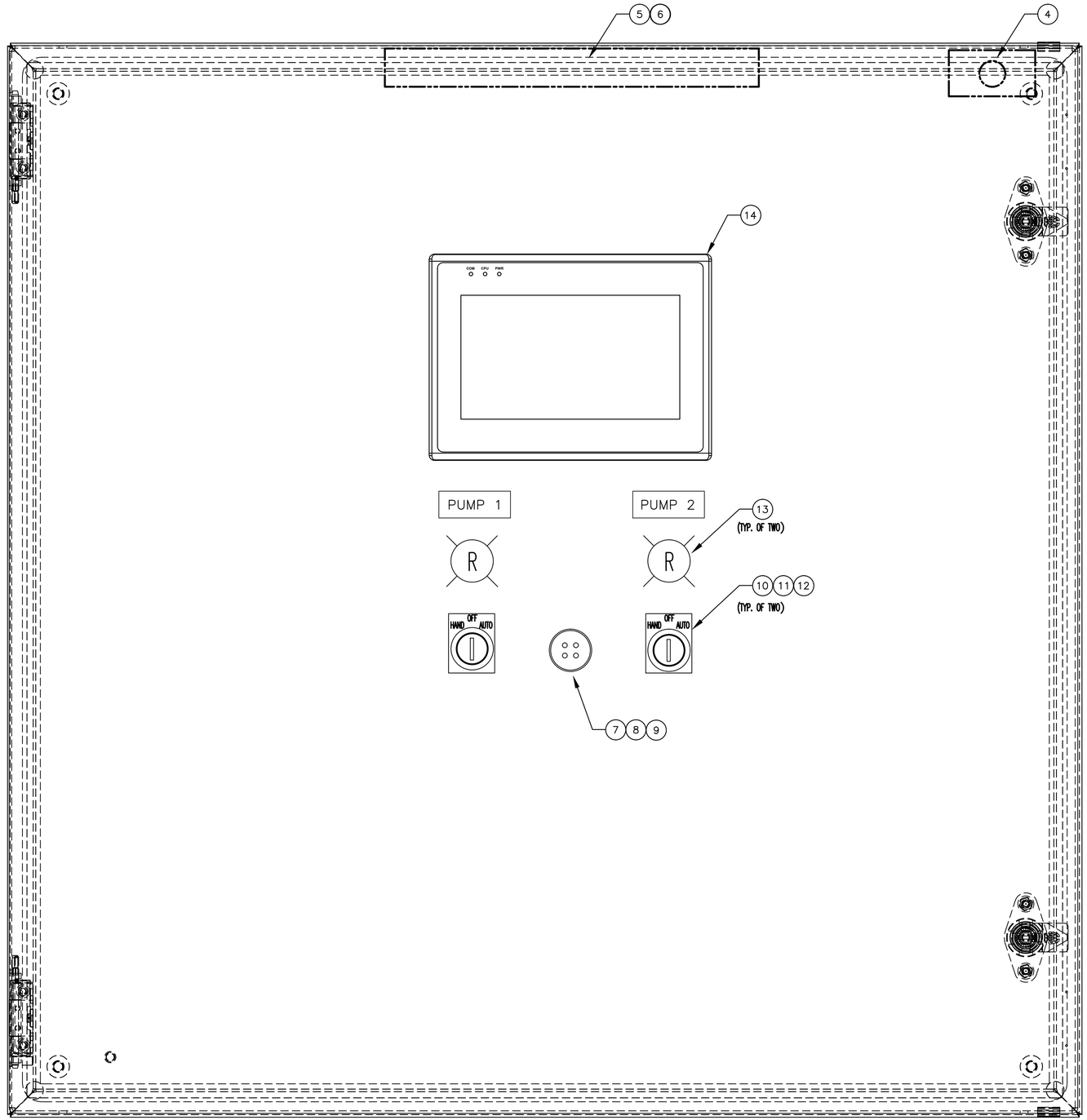

SHOP AS-BUILT DRAWINGS REV C

VAULT SERIAL NO.	DATE	MARK	NATURE REVISIONS	MADE	CHK'D	REV'D

J:\FilOps\WS691\Secure\scada sites info (operational)\dww lift stations\sta50_39 ave e\airlift replacement\plot files\2 SCADA PANEL DOOR LAYOUT.dwg
lowthir May-11-16 6:39am

APPROVED FOR ADVERTISING
NANCY LOCKE
DEPARTMENT OF FINANCE & ADMINISTRATIVE SERVICES
SEATTLE, WASHINGTON 20

BY:
PURCHASING & CONTRACTING SERVICES DIRECTOR

INITIALS AND DATE		INITIALS AND DATE	
DESIGNED	RL	REVIEWED:	
CHECKED	IS	DES.	CONST.
		SDOT	PROJ. MGR.
DRAWN	RL	RECEIVED	
CHECKED	IS	REVISED AS BUILT 7/14/2015	

ALL WORK SHALL BE DONE IN ACCORDANCE WITH THE CITY OF SEATTLE STANDARD PLANS AND SPECIFICATIONS AND OTHER DOCUMENTS CALLED FOR IN SECTION 0-02.3 OF THE PROJECT MANUAL.

IRINA SINITSINA
STATE OF WASHINGTON
37048
REGISTERED
PROFESSIONAL ENGINEER

Seattle Public Utilities

City of Seattle
Ray Hoffman, Director

ORDINANCE NO. Ordinance Number
FUND: Fund
SCALE: AS SHOWN
APPROVED
INSPECTOR'S BOOK

PUMP STATION 050
AIRLIFT REPLACEMENT:
2534 39TH AVE. E.

JOB NO.
PC C314050
R/W
CO C314050

VAULT PLAN NO.

SHEET 2 OF 16

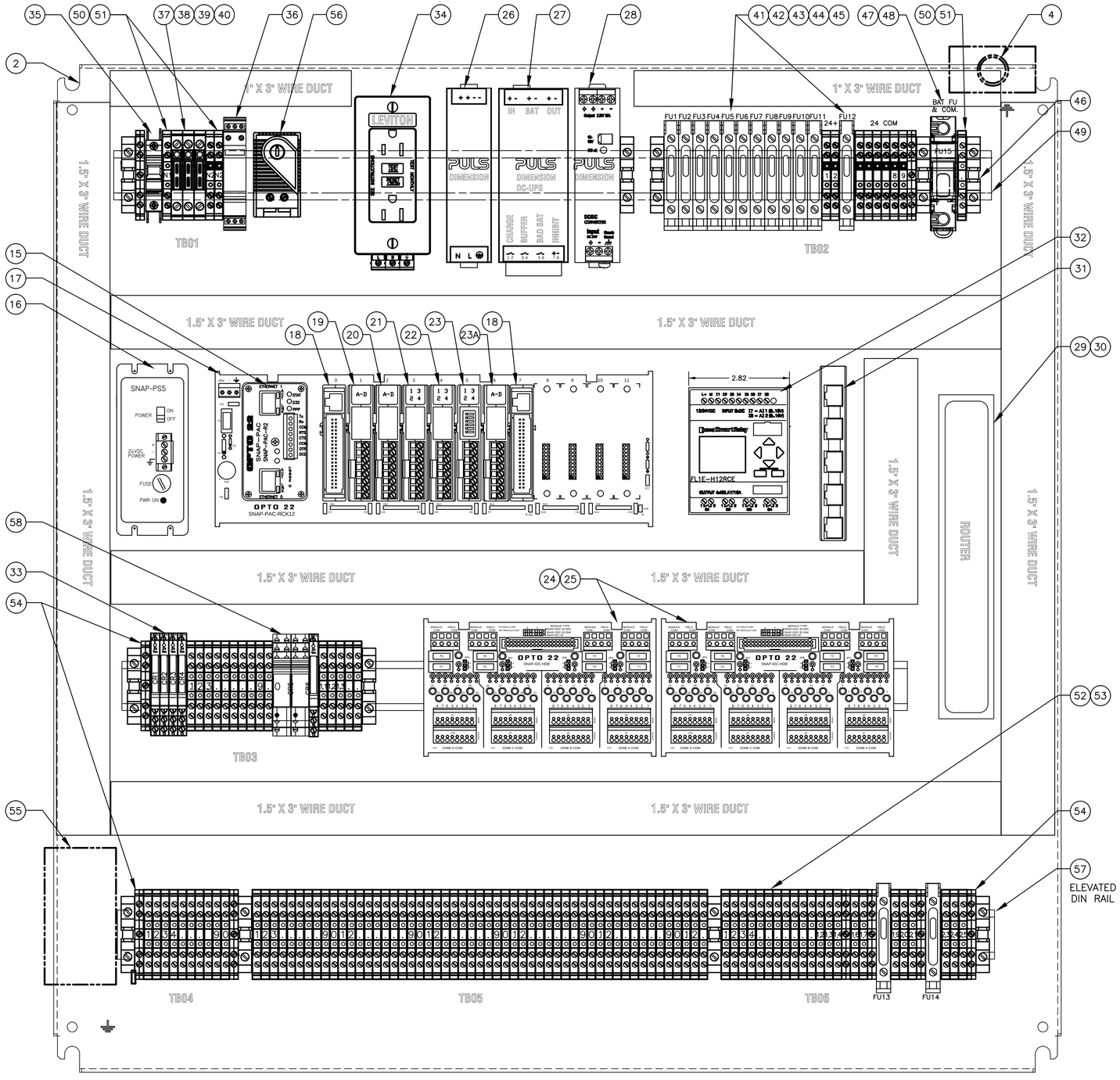

NOTES:
1. INTRINSIC BARRIERS AS REQUIRED.
2. BLUE TERMINALS ARE TO HAZARDOUS AREA.
3. FOLLOW NEC ARTICLE 500 & 504 REQUIREMENTS.
4. REUSE EXISTING BARRIER ENCLOSURE OR REPLACE IN-KIND.

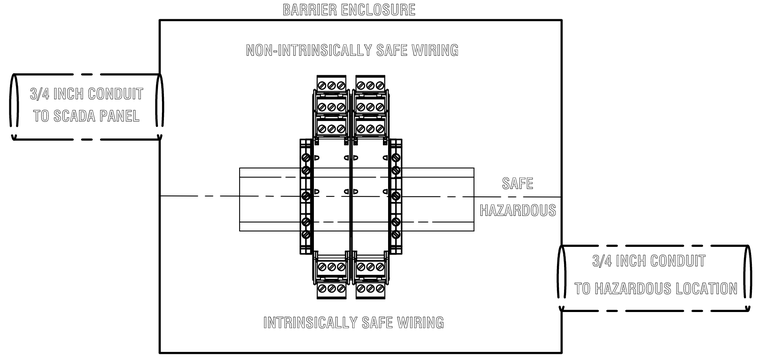

SHOP AS-BUILT DRAWINGS REV C

CABINET BACK PANEL LAYOUT

APPROVED FOR ADVERTISING
NANCY LOCKE
DEPARTMENT OF FINANCE & ADMINISTRATIVE SERVICES
SEATTLE, WASHINGTON 20

BY:
PURCHASING & CONTRACTING SERVICES DIRECTOR

INITIALS AND DATE		INITIALS AND DATE	
DESIGNED	RL	REVIEWED:	
CHECKED	IS	DES.	CONST.
		SDOT	PROJ. MGR.
DRAWN	RL	RECEIVED	
CHECKED	IS	REVISED AS BUILT	

ALL WORK SHALL BE DONE IN ACCORDANCE WITH THE CITY OF SEATTLE STANDARD PLANS AND SPECIFICATIONS AND OTHER DOCUMENTS CALLED FOR IN SECTION 0-02.3 OF THE PROJECT MANUAL.

STATE OF WASHINGTON 37048 REGISTERED PROFESSIONAL ENGINEER

Seattle Public Utilities

City of Seattle
Ray Hoffman, Director

ORDINANCE NO. Ordinance Number
FUND: Fund
SCALE: AS SHOWN
APPROVED
INSPECTOR'S BOOK

PUMP STATION 050 AIRLIFT REPLACEMENT: 2534 39TH AVE. E.

JOB NO
PC C314050
R/W
CO C314050
VAULT PLAN NO.
SHEET 3 OF 16

VAULT	SERIAL NO.	DATE	MARK	NATURE REVISIONS	MADE	CHK'D	REV'D

J:\FldOps\WS691\Secure\scada sites info (operational)\dww lift stations\sta50_39 ave e\airlift replacement\plot files\2 CABINET BACK PANEL LAYOUT.dwg
lowthir May-11-16 6:39am

ITEM NO.	ID	QTY.	MANUFACTURE ORDER PART NO	MANUFACTURE PART NO	MANUFACTURES	DESCRIPTIONS
1	CAB	1	303012-SD		B-Line	Concept NEMA 12 enclosure 30x30x12 ANSI 61 Gray
2	CAB	1	3030P		B-Line	30x30 equipment panel
3	CAB	1	WMHPTO		B-Line	Padlocking handle
4	CAB	1	2DM1		Honeywell	Mechanical DPDT Limit Switch (with mounting brkt.)
5	CAB	1	WLB32C285PB		Banner	12" LED Light Bar, 12 to 30VDC, 600 Lumens
6	CAB	1	LMBWLB32MAG		Banner	Magnetic Mounts for LED Light Bar, set of 2
7	CAB	1	MS3102R14S-2S		Amphenol Industrial	Amphenol 4-pin connector, female, box-mount
8	CAB	1	10-40450-14		Amphenol Industrial	Gasket for Amphenol 4-pin connector
9	CAB	1	MS25043-14D		Amphenol Industrial	Cover for Amphenol 4-pin connector
10	CAB	2	XB4BG03	Harmony	SquareD	3-position switch Stay put, 2 NO contacts
11	CAB	4	ZBE101	Harmony	SquareD	Contact block for the 3-pos switch (HOA)
12	CAB	2	HOA Label	custom		Label plate (HOA)
13	CAB	2	XB4BVB4	Harmony	SquareD	Pilot Light, Round, Integral LED-Red, 24V
14	CAB	1	G307K200	G307K200	Red Lion	Operator Interface Unit (OIU) Color touch screen with 7" display, 24VDC, Ethernet Com.
15	PAC	1	SNAP-PAC-R2		Opto 22	SNAP controller
16	PAC	1	SNAP-PS5-24DC		Opto 22	24 VDC to 5 VDC power supply
17	PAC	1	SNAP-PAC-RCK12		Opto 22	12 slot rack
18	PAC	2	SNAP-IDC-32	Slot 0, Slot 7	Opto 22	32-channel digital input module
19	PAC	1	SNAP-AIV2-i	Slot 1	Opto 22	2-ch analog isolated voltage input module, 0- 100VDC
20	PAC	1	SNAP-AIMA-i	Slot 2	Opto 22	2-ch analog isolated current module, 4-20 mA
21	PAC	1	SNAP-ODC5SRC	Slot 3	Opto 22	4 channel digital output module, non-isolated
22	PAC	1	SNAP-ODC5-I	Slot 4	Opto 22	4 channel digital output module, isolated
23	PAC	1	SNAP-SCM-485-422	Slot 5	Opto 22	2-channel RS485 module
23A	PAC	1	SNAP-AIMA4	Slot 6	Opto 22	4 channel current input module, 4-20 mA
24	PAC	2	SNAP-HD-BF6		Opto 22	6' header cable for SNAP 32-ch DI
25	PAC	2	SNAP-IDC-HDB		Opto 22	Breakout rack is used with one 32-ch DI module
26	PS	1	CS10.243		Puls	Dimension C-series 24 VDC, 10 A power supply
27	PS	1	UB10.242		Puls	DC-UPS, 24 VDC output, 10A, Allowed batteries 17-130 Ah
28	PS	1	CD5.121		Puls	DC-DC Converter, 24 VDC to 12VDC
29	NETW	1	NETVANTA3200		ADTRAN	Network Router (Supplied by Owner)
30		1	Support Bracket		Custom	Support bracket for Network Router
31	NETW	1	IE-SW-BL05-5TX		WIEDMULLER	5 Port Ethernet Switch, unmanaged
32	SMART	1	FL1E-H12RCE		IDEC	Smart relay
33	RLY	5	29 66 171 (PLC-RSC-24VDC/21)		PHOENIX	24V Relay module, 250VAC switching voltage /6A continuous
34	AC	1	N7599-DIN		Leviton	120VAC, 15 Amp max dual GFCI receptacle, DIN rail mount

SHOP AS-BUILT DRAWINGS REV C

BILL OF MATERIAL SHEET 1 OF 2

APPROVED FOR ADVERTISING
NANCY LOCKE
DEPARTMENT OF FINANCE & ADMINISTRATIVE SERVICES
SEATTLE, WASHINGTON 20
BY:
PURCHASING & CONTRACTING SERVICES DIRECTOR

INITIALS AND DATE	
DESIGNED RL	
CHECKED IS	
DRAWN RL	
CHECKED IS	

INITIALS AND DATE	
REVIEWED:	
DES.	CONST.
SDOT	PROJ. MGR.
RECEIVED	
REVISED AS BUILT	

ALL WORK SHALL BE DONE IN ACCORDANCE WITH THE CITY OF SEATTLE STANDARD PLANS AND SPECIFICATIONS AND OTHER DOCUMENTS CALLED FOR IN SECTION 0-02.3 OF THE PROJECT MANUAL.

IRVIN SINNES STATE OF WASHINGTON 37048 REGISTERED PROFESSIONAL ENGINEER

Seattle Public Utilities
City of Seattle
Ray Hoffman, Director
ORDINANCE NO. Ordinance Number APPROVED
FUND: Fund
SCALE: AS SHOWN INSPECTOR'S BOOK

PUMP STATION 050 AIRLIFT REPLACEMENT: 2534 39TH AVE. E.

JOB NO: PC C314050 R/W CO C314050
VAULT PLAN NO.
SHEET 4 OF 16

REV'D	CHK'D	MADE	MARK	DATE	SERIAL NO.	VAULT

NATURE OF REVISIONS

J:\FldOps\WS691\Secure\scada sites info (operational)\dww lift stations\sta50_39 ave e\airlift replacement\plot files\3 BILL OF MATERIAL SHEET 1 OF 2.dwg
lowthir May-11-16 6:39am

ITEM NO.	ID	QTY.	MANUFACTURE ORDER PART NO	MANUFACTURE PART NO	MANUFACTURES	DESCRIPTIONS
35	AC	1	5SJ4118-7HG41	CB-1	Siemens	MAIN CIRCUIT BREAKER CB1, 15 A
36	AC	1	28 56 812 (PT2-PE/s-120 AC/FM)		PHOENIX	Din rail Mount Type 3 Pluggable Surge Protector
37	AC	1	07 12 314 (TCP-10A)	CB-3	PHOENIX	CIRCUIT BREAKER, 10A (duplex receptacle)
38	AC	1	07 12 194 (TCP-1A)	CB-2	PHOENIX	CIRCUIT BREAKER, 1A (heater)
39	AC	1	07 12 275 (TCP-6A)	CB-4	PHOENIX	CIRCUIT BREAKER, 6A (DC power supply)
40	AC	3	31 18 203 (UK 6-FSI/C)		PHOENIX	Terminal block circuit breaker base
41	TERM	14	30 04 265 (UK 6,3-HESILED24)		PHOENIX	Fuse terminal block with Blown fuse indicator, 15-30 VDC
42	FUSE	1	AGC-5	FU-10	Bussman	Fast acting, glass fuse, 5A
43	FUSE	6	AGC-1	FU-2, FU-4, FU-8, FU-11, FU-12, FU-13	Bussman	Fast acting, glass fuse, 1A
44	FUSE	6	AGC-2	FU-1, FU-5, FU-6, FU-7, FU-9, FU-14	Bussman	Fast acting, glass fuse, 2A
45	FUSE	1	AGC-0.5	FU-3	Bussman	Fast acting, glass fuse, 0.5A
46	TERM	12	12 01 442 (E/UK)		PHOENIX	End Block (thick, din rail)
47	TERM	1	CHM1		Bussmann	Fuse Holder for Battery Fuse
48	FUSE	1	FNM-30	FU-15	Bussmann	Battery Fuse, 30A, Low-Peak, Rated at 300V DC
49	TERM	1	08 01 733	NS 35/7 5 perforated	PHOENIX	35 mm din rail, 2m
50	TERM	4	27 74 017 (UKK 5)		PHOENIX	Terminal block (din rail) double feed isolated, AC Terminals
51	TERM	2	27 70 024 (D-UKK 3/5)		PHOENIX	UKK 5 Terminal Block (end cover, thin plate, din rail)
52	TERM	4	27 75 113 (D-UDK 4)		PHOENIX	Terminal Block (end cover, thin plate, din rail)
53	TERM	100	27 75 016 (UDK 4)		PHOENIX	Feed thru modular terminal Block (din rail)
54	TERM	10	27 75 184 (UDK4-PE)		PHOENIX	Terminal Block ground (din rail)
55	HTR	1	Blizzard 50H 40W		DBK Blizzard	Panel Heater, 120 VAC, 40W
56	THERM	1	A-TEMNC		Hoffman	Thermostat NC
57	DIN	1	1492-DR6	Used for TB04, TB05 & TB06	Allen Bradley	Aluminum, 35mm x 7.5mm x 57.4mm Raised DIN Rail
58	RLY	2	29 67 060 (PLC-RSC-24VDC/21-21)	CR5,CR6	PHOENIX	2 Pole, 24V Relay module, 250VAC switching voltage /6A continuous
59						
60						

SHOP AS-BUILT DRAWINGS REV C

BILL OF MATERIAL SHEET 2 OF 2

APPROVED FOR ADVERTISING
NANCY LOCKE
DEPARTMENT OF FINANCE & ADMINISTRATIVE SERVICES
SEATTLE, WASHINGTON 20
BY:
PURCHASING & CONTRACTING SERVICES DIRECTOR

INITIALS AND DATE		INITIALS AND DATE	
DESIGNED	RL	REVIEWED:	
CHECKED	IS	DES.	CONST.
		SDOT	PROJ. MGR.
DRAWN	RL	RECEIVED	
CHECKED	IS	REVISED AS BUILT	

ALL WORK SHALL BE DONE IN ACCORDANCE WITH THE CITY OF SEATTLE STANDARD PLANS AND SPECIFICATIONS AND OTHER DOCUMENTS CALLED FOR IN SECTION 0-02.3 OF THE PROJECT MANUAL.

TINA SINISINA — STATE OF WASHINGTON — 37048 — REGISTERED PROFESSIONAL ENGINEER

Seattle Public Utilities
City of Seattle
Ray Hoffman, Director
ORDINANCE NO. Ordinance Number — APPROVED
FUND: Fund
SCALE: AS SHOWN — INSPECTOR'S BOOK

PUMP STATION 050 AIRLIFT REPLACEMENT: 2534 39TH AVE. E.

JOB NO. PC C314050 R/W CO C314050
VAULT PLAN NO.
SHEET 5 OF 16

NATURE OF REVISIONS | MADE | CHK'D | REV'D | DATE | MARK | SERIAL NO. | VAULT

J:\FdOps\WS691\Secure\scada sites info (operational)\dww lift stations\sta50_39 ave e\airlift replacement\plot files\4 BILL OF MATERIAL SHEET 2 OF 2.dwg
lowthir May-11-16 6:39am

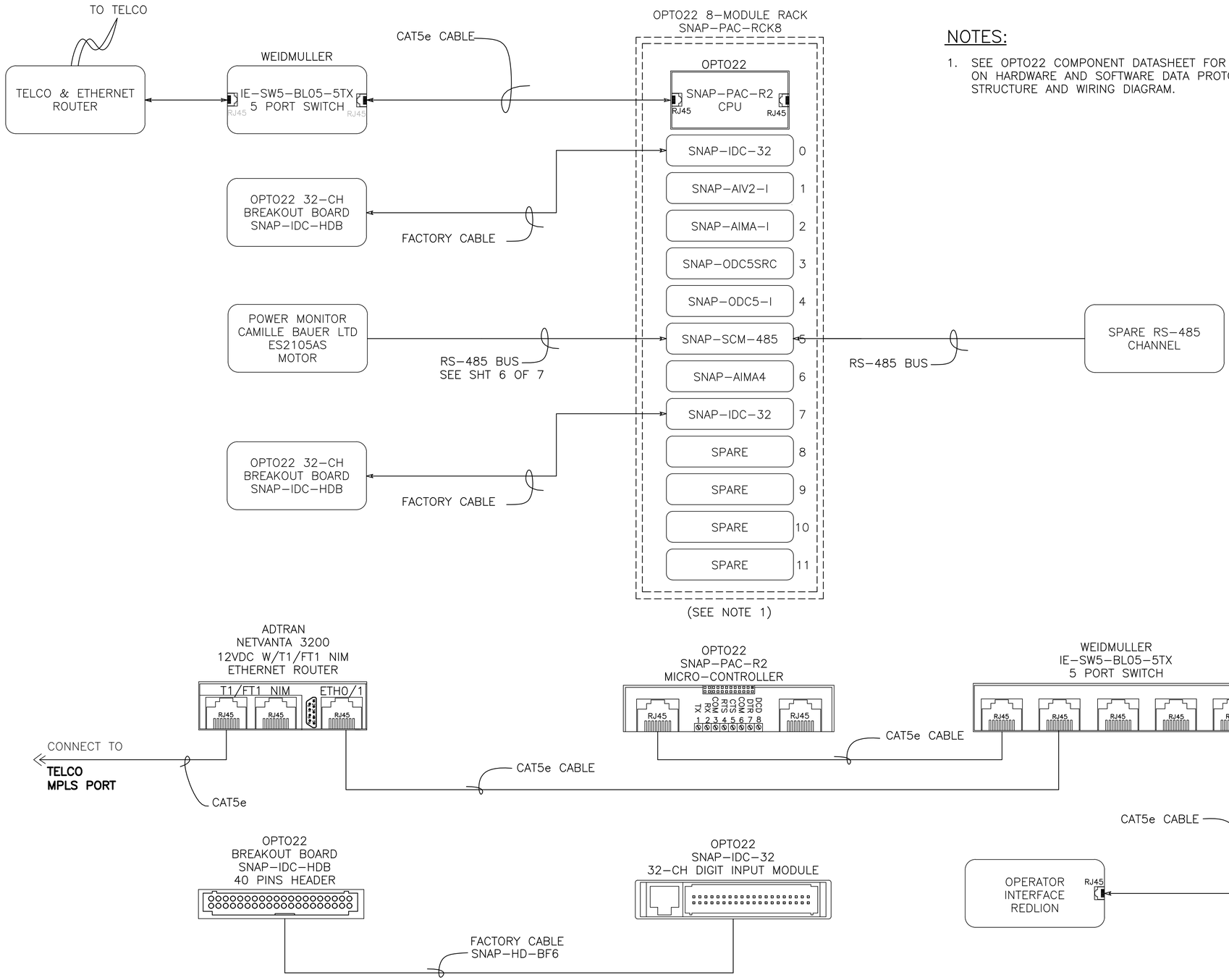

NOTES:

1. SEE OPTO22 COMPONENT DATASHEET FOR MORE DETAILS ON HARDWARE AND SOFTWARE DATA PROTOCOL STRUCTURE AND WIRING DIAGRAM.

VAULT	SERIAL NO.	DATE	MARK	NATURE REVISIONS	MADE	CHK'D	REV'D

SHOP AS-BUILT DRAWINGS REV C

COMMUNICATION DIAGRAM

APPROVED FOR ADVERTISING
NANCY LOCKE
DEPARTMENT OF FINANCE & ADMINISTRATIVE SERVICES
SEATTLE, WASHINGTON 20
BY:
PURCHASING & CONTRACTING SERVICES DIRECTOR

INITIALS AND DATE		INITIALS AND DATE	
DESIGNED	RL	REVIEWED:	
CHECKED	IS	DES.	CONST.
		SDOT	PROJ. MGR.
DRAWN	RL	RECEIVED	
CHECKED	IS	REVISED AS BUILT	

ALL WORK SHALL BE DONE IN ACCORDANCE WITH THE CITY OF SEATTLE STANDARD PLANS AND SPECIFICATIONS AND OTHER DOCUMENTS CALLED FOR IN SECTION 0-02.3 OF THE PROJECT MANUAL.

IRINA SANIUSANA — STATE OF WASHINGTON — 37048 — REGISTERED PROFESSIONAL ENGINEER

Seattle Public Utilities
City of Seattle
Ray Hoffman, Director
ORDINANCE NO. Ordinance Number APPROVED
FUND: Fund
SCALE: AS SHOWN INSPECTOR'S BOOK

PUMP STATION 050 AIRLIFT REPLACEMENT: 2534 39TH AVE. E.

JOB NO. PC C314050 R/W CO C314050
VAULT PLAN NO.
SHEET 6 OF 16

J:\PlotOps\WS691\Secure\scada sites info (operational)\dww lift stations\sta50_39 ave e\airlift replacement\plot files\5 COMMUNICATION DIAGRAM.dwg
lowthir May-11-16 6:39pm

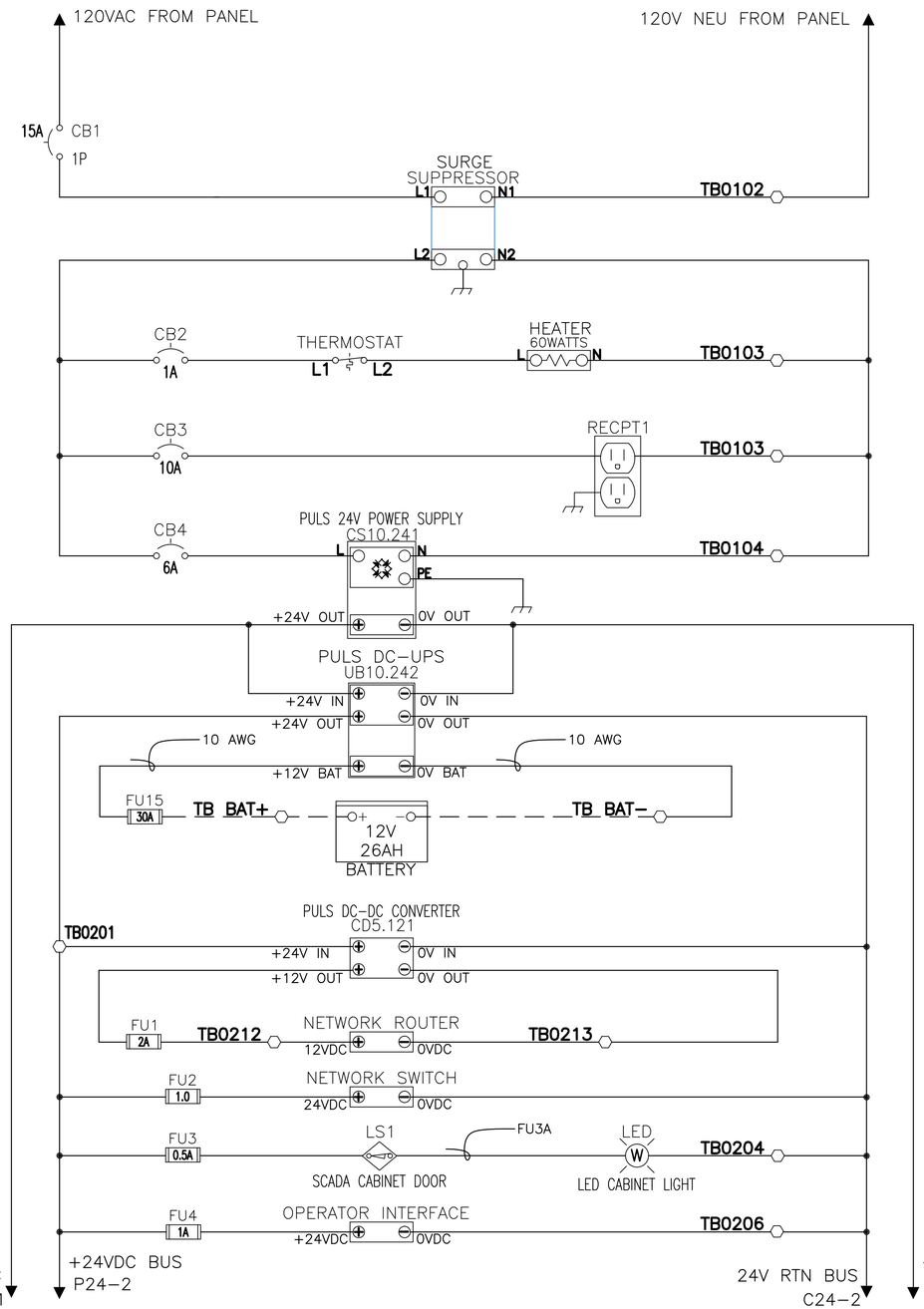

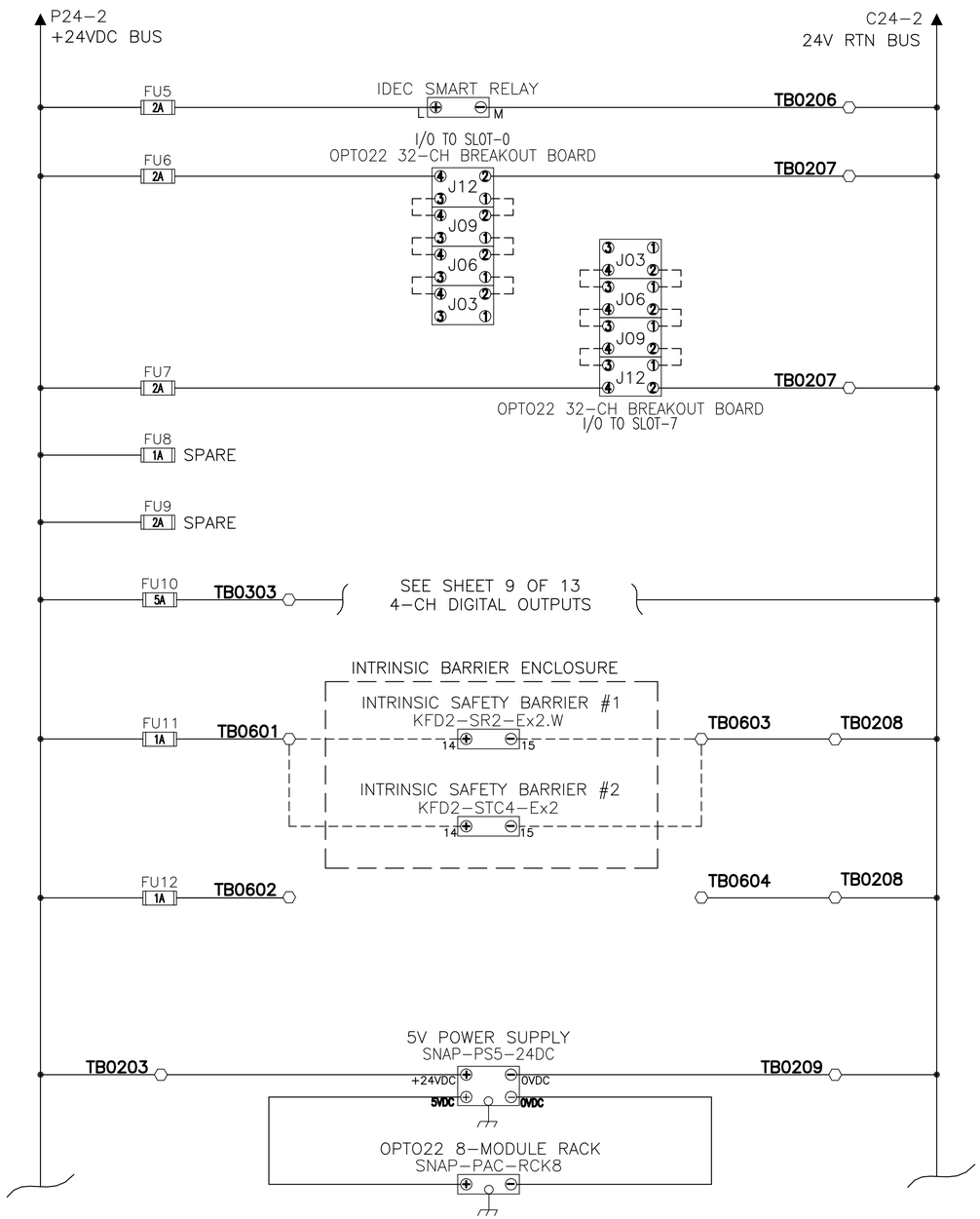

WIRING NOTE:

POWER DISTRIBUTION SCHEMATIC SHOWS ONLY THE POWER TERMINALS OF COMPONENTS. FOR MORE DETAILS OF COMPONENTS, SEE MANUFACTURES' DATASHEETS AND MANUALS.

SHOP AS-BUILT DRAWINGS REV C

POWER DISTRIBUTION DIAGRAM

APPROVED FOR ADVERTISING
NANCY LOCKE
DEPARTMENT OF FINANCE & ADMINISTRATIVE SERVICES
SEATTLE, WASHINGTON 20

BY:
PURCHASING & CONTRACTING SERVICES DIRECTOR

INITIALS AND DATE		INITIALS AND DATE	
DESIGNED	RL	REVIEWED:	
CHECKED	IS	DES.	CONST.
		SDOT	PROJ. MGR.
DRAWN	RL	RECEIVED	
CHECKED	IS	REVISED AS BUILT	

ALL WORK SHALL BE DONE IN ACCORDANCE WITH THE CITY OF SEATTLE STANDARD PLANS AND SPECIFICATIONS AND OTHER DOCUMENTS CALLED FOR IN SECTION 0-02.3 OF THE PROJECT MANUAL.

Seattle Public Utilities
City of Seattle
Ray Hoffman, Director

ORDINANCE NO. Ordinance Number
APPROVED
FUND: Fund
SCALE: AS SHOWN
INSPECTOR'S BOOK

PUMP STATION 050 AIRLIFT REPLACEMENT: 2534 39TH AVE. E.

JOB NO. PC C314050 R/W CO C314050
VAULT PLAN NO.
SHEET 7 OF 16

VAULT	SERIAL NO.	DATE	MARK	NATURE REVISIONS	MADE	CHK'D	REV'D

J:\FldOps\WS691\Secure\scada sites info (operational)\dww lift stations\sta50_39 ave e\airlift replacement\plot files\6 POWER DISTRIBUTION DIAGRAM.dwg
lowthir May-11-16 6:39pm

P2/L1–120V
120VAC BUS

P1/L1–120V
120VAC BUS

SEE SHEET #8
CONNECT TO FUSE #10

C24–2
24V RTN BUS

NEU BUS
P120V–RTN

OPTO22
SNAP–ODC5SRC
RACK8–BP00
SLOT 03
4–CH DIGIT OUTPUT
DO03

TB0207

FU6

START MOTOR 1 DO:03:00	CH0	CR1 OUTPUT RELAY	MOTOR 1 RUN COMMAND
START MOTOR 2 DO:03:01	CH1	CR2 OUTPUT RELAY	MOTOR 2 RUN COMMAND
SPARE CONTROL DO:03:02	CH2	CR3 OUTPUT RELAY	SPARE OUTPUT
SPARE CONTROL DO:03:03	CH3	CR4 OUTPUT RELAY	SPARE OUTPUT

(HOA1 & HOA2 SHOWN IN HAND POSITION)

PR1–1
PFR
RUN RELAY
MCC

TB0401

HOA1
X00 HAND
00X AUTO

TB0402
CR1 11 14
AUTO CONTROL
PLC–RSC–24VDC/21
TB0403

Q1 1 2
BACKUP CONTROL
IDEC–SMART RELAY

REMOTE PLUG
D C A B

LOCATED IN MCC
MOTOR CONTACT
M1
MCC
MCC OL
MOTOR 1 OVERLOAD CONTACT

PUMP/MOTOR 1 START

IDEC–SMART RELAY
Q2 1 2
BACKUP CONTROL

HOA2
PR1–2
PFR
RUN RELAY
MCC

TB0404
00X AUTO
X00 HAND

TB0405
CR2 11 14
AUTO CONTROL
PLC–RSC–24VDC/21
TB0406

LOCATED IN MCC
MOTOR CONTACT
M2
MCC
MCC OL
MOTOR 2 OVERLOAD CONTACT

PUMP/MOTOR 2 START

TB0407
120VAC
CR3 11 14
PLC–RSC–24VDC/21
TB0408
CONTROL

TB0409
12VDC
CR4 11 12
PLC–RSC–24VDC/21
TB0410
CONTROL

SPARE OUTPUT

24V RTN BUS

+24VDC
FU10

C24–1

NOTES:

1. PLC ACTIVE WILL ENABLE IDEC SMART RELAY TO BACKUP CONTROL OF PUMP MOTORS ONLY WHEN PLC MALFUNCTIONS. (SEE IDEC SMART RELAY WIRING DETAIL AS SHOWN)
2. DRYWELL SUPPLY FAN LOW FLOW AND GO LIGHT MOUNTED AT ACCESS HATCH.

(CONT. FROM LOWER LEFT)

+24VDC
FU10

C24–2
24V RTN BUS

OPTO22
SNAP–ODC5–I
RACK8–BP00
SLOT 04
4–CH DIGIT OUTPUT
DO04

FU6

PLC ACTIVE DO:04:00	CH0	BACKUP CONTROL IDEC–SMART RELAY	PLC ACTIVE (SEE NOTE 1)
CABINET LIGHT DO:04:01	CH1	TB0204	SPARE OUTPUT
SPARE CONTROL DO:04:02	CH2		SPARE OUTPUT
SPARE CONTROL DO:04:03	CH3		SPARE OUTPUT

TB0307
DRYWELL SUPPLY FAN FLOW SWITCH FS–5010
TB0308
CR5 DRYWELL SUPPLY FAN LOW FLOW

CR5/1 11 12 LOW AIR FLOW
TB0309
LOW AIR FLOW LT (A)
TB0310
(NOTE 2)

CR6/1 11 12 LOW AIR FLOW
0309A
CR5/1 11 14 LOW AIR FLOW
CR6/1A 11 14 LOW AIR FLOW
TB0313
GO LT (G)
(NOTE 2)

TB0311
DRYWELL EXHAUST FAN FLOW SWITCH FSL–5011
TB0312
CR6 DRYWELL EXHAUST FAN LOW FLOW
CR6A DRYWELL EXHAUST FAN LOW FLOW

TB0314

IDEC SMART RELAY
FLD–H12RCE

TB0402	1	Q1	L+ 24VDC INPUT
TB0403	2	Q1	M 0VDC INPUT
TB0405	3	Q2	I1 HI FLOW SIGNAL
TB0406	4	Q2	I2 X
	5	Q3	I3 PLC ACTIVE
	6	Q3	I4 X
	7	Q4	I5 X
	8	Q4	I6 X
			I7 X
			I8 X
			NC X

IDEC SMART RELAY TERMINAL DETAIL
BACKUP CONTROL

NATURE REVISIONS	MADE	CHK'D	REV'D

VAULT SERIAL NO.	DATE	MARK
SCHEMA (C.dwg)		

I:\FldOps\WS691\Secure\scada sites info (operational)\dww lift stations\sta50_39 ave e\airlift replacement\plot files\7 DIGITAL OUTPUT
lowthir May-11-16 6:39am

SHOP AS-BUILT DRAWINGS REV C

DIGITAL OUTPUT SCHEMATIC

APPROVED FOR ADVERTISING
NANCY LOCKE
DEPARTMENT OF FINANCE & ADMINISTRATIVE SERVICES
SEATTLE, WASHINGTON 20

BY:
PURCHASING & CONTRACTING SERVICES DIRECTOR

INITIALS AND DATE		INITIALS AND DATE	
DESIGNED	RL	REVIEWED:	
CHECKED	IS	DES.	CONST.
		SDOT	PROJ. MGR.
DRAWN	RL	RECEIVED	
CHECKED	IS	REVISED AS BUILT	

ALL WORK SHALL BE DONE IN ACCORDANCE WITH THE CITY OF SEATTLE STANDARD PLANS AND SPECIFICATIONS AND OTHER DOCUMENTS CALLED FOR IN SECTION 0–02.3 OF THE PROJECT MANUAL.

LINA SINISMA
STATE OF WASHINGTON
21048
REGISTERED
PROFESSIONAL ENGINEER

Seattle Public Utilities
City of Seattle
Ray Hoffman, Director

ORDINANCE NO. Ordinance Number
FUND: Fund
SCALE: AS SHOWN
APPROVED
INSPECTOR'S BOOK

PUMP STATION 050 AIRLIFT REPLACEMENT: 2534 39TH AVE. E.

JOB NO. PC C314050 R/W CO C314050
VAULT PLAN NO.
SHEET 8 OF 16

2. DRYWELL SUPPLY FAN LOW FLOW AND GO LIGHT MOUNTED AT ACCESS HATCH.

IDEC SMART RELAY TERMINAL DETAIL
BACKUP CONTROL

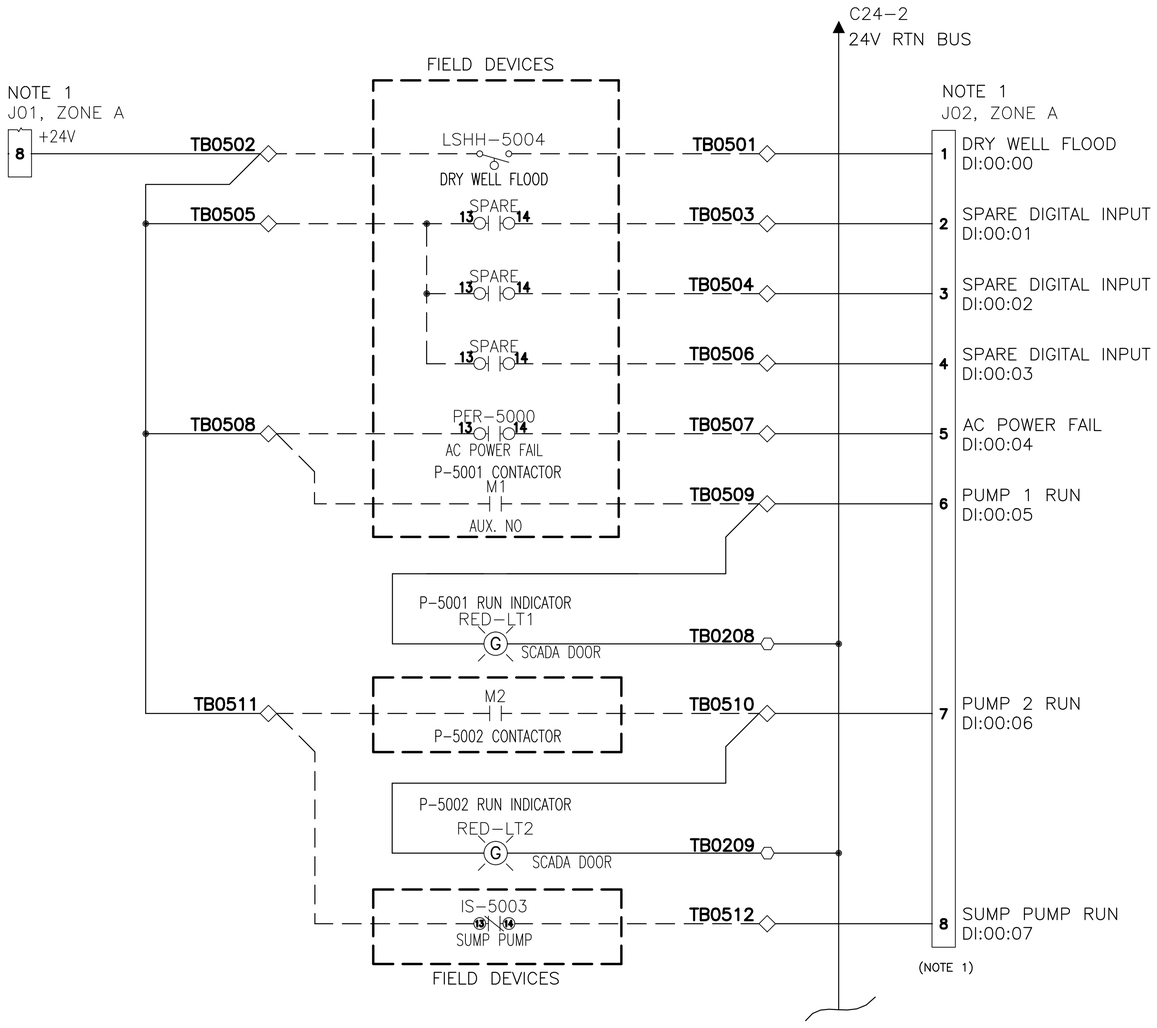

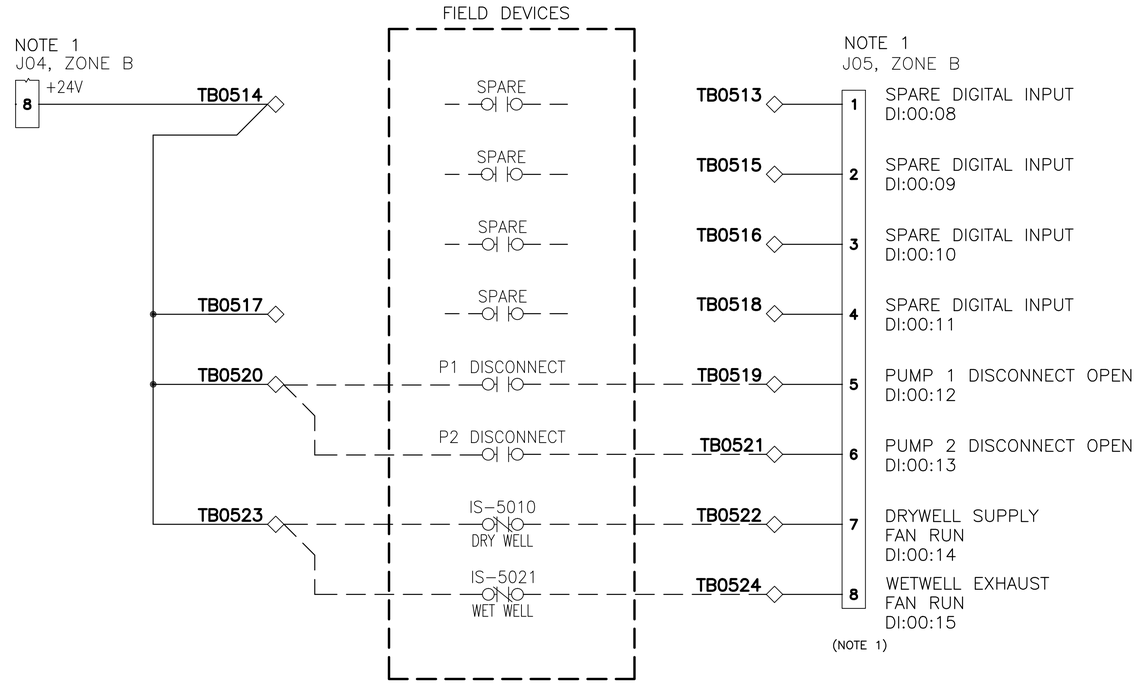

NOTE:

1. J01–J12 ARE BREAKOUT BOARD TERMINALS, FOR MORE DETAILS, SEE SNAP–IDC–HDB DATA SHEET.

VAULT	SERIAL NO.	DATE	MARK	NATURE REVISIONS	MADE	CHK'D	REV'D

SCHEMATIC SHEET 1 OF 3.dwg

J:\PdOps\WS691\Secure\scada sites info (operational)\dww lift stations\sta50_39 ave e\airlift replacement\plot files\8 DIGITAL INPUT
lowthir May-11-16 6:39am

SHOP AS-BUILT DRAWINGS REV C

DIGITAL INPUT SCHEMATIC SHEET 1 OF 3

APPROVED FOR ADVERTISING
NANCY LOCKE
DEPARTMENT OF FINANCE & ADMINISTRATIVE SERVICES
SEATTLE, WASHINGTON 20
BY:
PURCHASING & CONTRACTING SERVICES DIRECTOR

INITIALS AND DATE		INITIALS AND DATE	
DESIGNED	RL	REVIEWED:	
CHECKED	IS	DES.	CONST.
		SDOT	PROJ. MGR.
DRAWN	RL	RECEIVED	
CHECKED	IS	REVISED AS BUILT	

ALL WORK SHALL BE DONE IN ACCORDANCE WITH THE CITY OF SEATTLE STANDARD PLANS AND SPECIFICATIONS AND OTHER DOCUMENTS CALLED FOR IN SECTION 0-02.3 OF THE PROJECT MANUAL.

IRINA SANTANA
STATE OF WASHINGTON
37048
REGISTERED
PROFESSIONAL ENGINEER

Seattle Public Utilities
City of Seattle
Ray Hoffman, Director
ORDINANCE NO. Ordinance Number
APPROVED
FUND: Fund
SCALE: AS SHOWN
INSPECTOR'S BOOK

PUMP STATION 050 AIRLIFT REPLACEMENT: 2534 39TH AVE. E.

JOB NO. PC C314050 R/W CO C314050
VAULT PLAN NO.
SHEET 9 OF 16

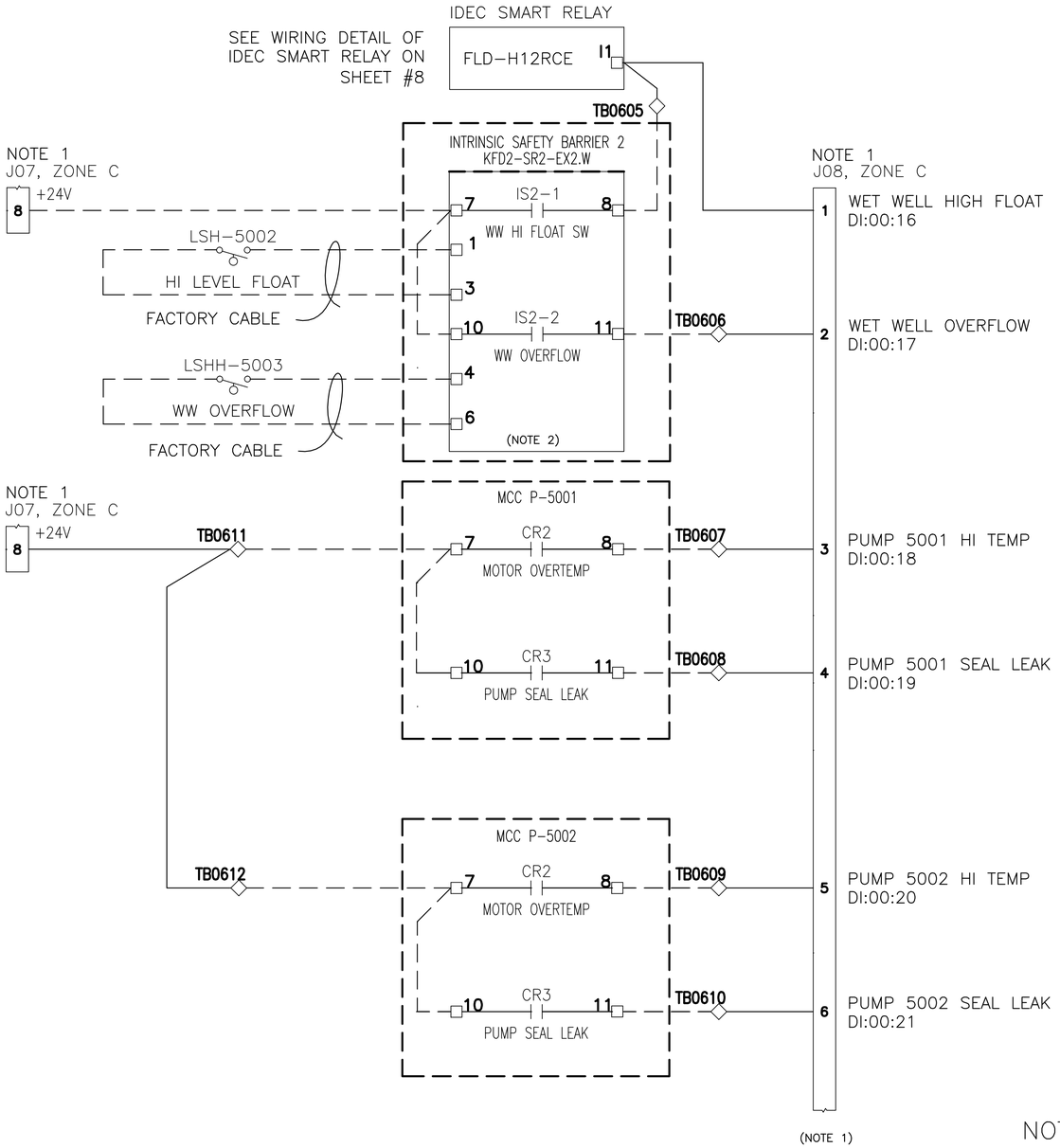

(SEE THE INTRINSIC SAFETY BARRIER WIRING DETAIL AS SHOWN ON THIS SHEET)

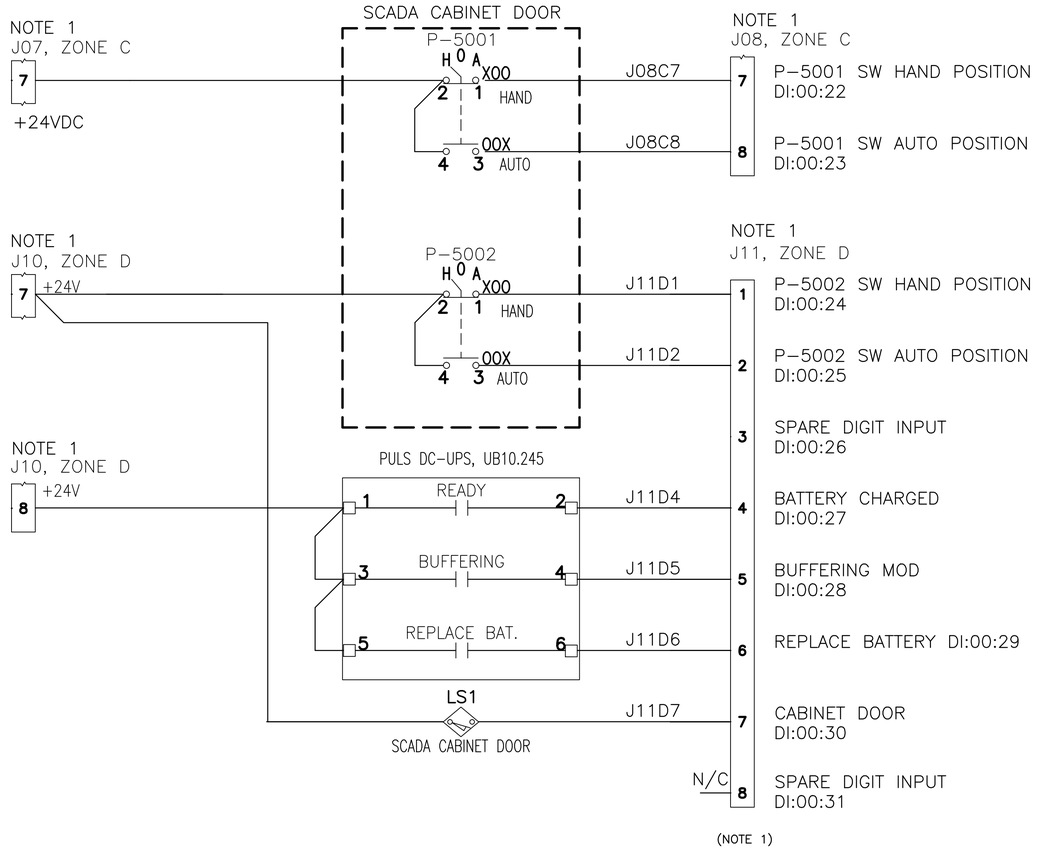

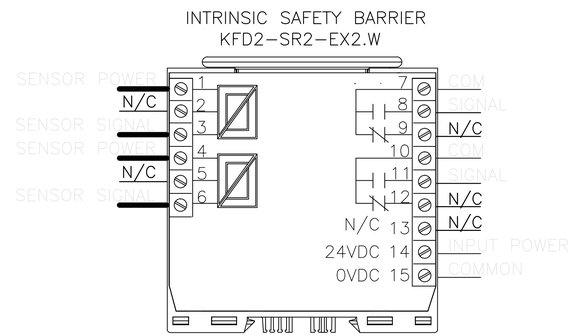

INTRINSIC SAFETY BARRIER WIRING DETAILS

NOTE:

1. J01–J12 ARE BREAKOUT BOARD TERMINALS, FOR MORE DETAILS, SEE SNAP-IDC-HDB DATA SHEET.
2. INTRINSIC BARRIERS ARE MOUNTED IN EXTERIOR PANEL. WILL BE WIRED TO TB06 TERMINALS AT INSTALLATION.

SHOP AS-BUILT DRAWINGS REV C

DIGITAL INPUT SCHEMATIC SHEET 2 OF 3

APPROVED FOR ADVERTISING
NANCY LOCKE
DEPARTMENT OF FINANCE & ADMINISTRATIVE SERVICES
SEATTLE, WASHINGTON 20
BY:
PURCHASING & CONTRACTING SERVICES DIRECTOR

INITIALS AND DATE
DESIGNED RL
CHECKED IS
DRAWN RL
CHECKED IS

INITIALS AND DATE
REVIEWED:
DES. CONST.
SDOT PROJ. MGR.
RECEIVED
REVISED AS BUILT

ALL WORK SHALL BE DONE IN ACCORDANCE WITH THE CITY OF SEATTLE STANDARD PLANS AND SPECIFICATIONS AND OTHER DOCUMENTS CALLED FOR IN SECTION 0-02.3 OF THE PROJECT MANUAL.

STATE OF WASHINGTON 37048 REGISTERED PROFESSIONAL ENGINEER

Seattle Public Utilities
City of Seattle
Ray Hoffman, Director
ORDINANCE NO. Ordinance Number
APPROVED
FUND: Fund
SCALE: AS SHOWN
INSPECTOR'S BOOK

PUMP STATION 050
AIRLIFT REPLACEMENT:
2534 39TH AVE. E.

JOB NO. PC C314050
R/W
CO C314050
VAULT PLAN NO.
SHEET 10 OF 16

VAULT SERIAL NO. | DATE | MARK | NATURE REVISIONS | MADE | CHK'D | REV'D

J:\FidOps\WS691\Secure\scada sites info (operational)\dww lift stations\sta50_39 ave e\airlift replacement\plot files\9 DIGITAL INPUT SCHEMATIC SHEET 2 OF 3.dwg
lowthir May-11-16 6:40am

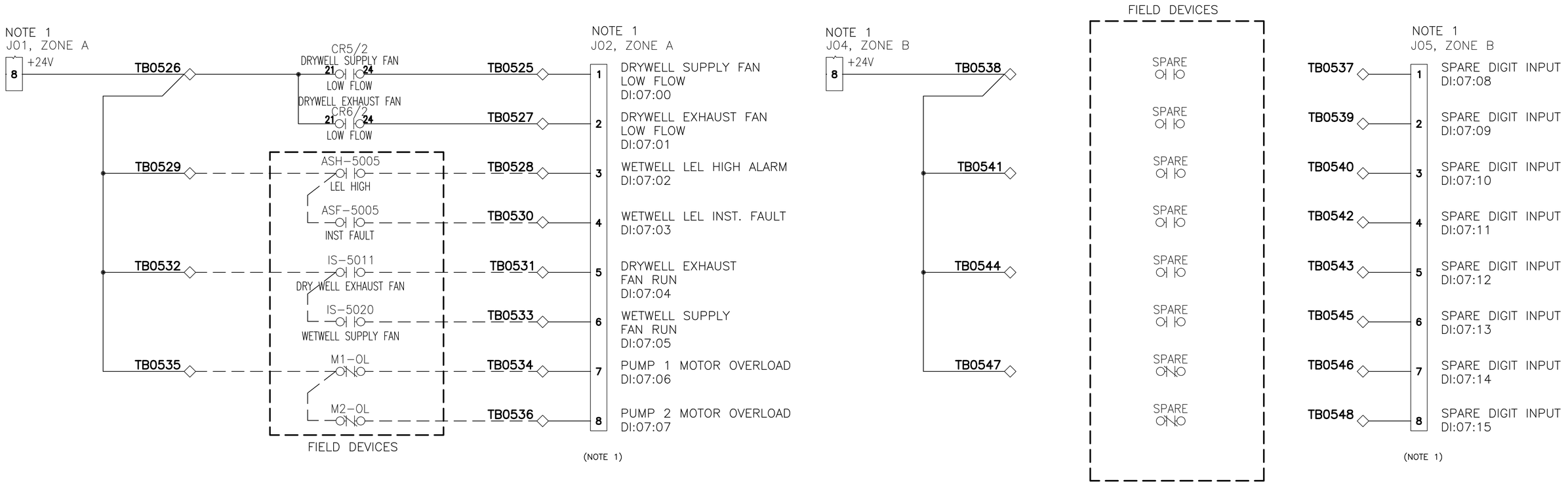

NOTE:

1. J01–J12 ARE BREAKOUT BOARD TERMINALS, FOR MORE DETAILS, SEE SNAP–IDC–HDB DATA SHEET.
2. ONLY FIRST 16 INPUTS WIRED TO TERMINALS.

VAULT SERIAL NO.	DATE	MARK	NATURE REVISIONS	MADE	CHK'D	REV'D

J:\FidOps\WS691\Secure\scada sites info (operational)\dww lift stations\sta50_39 ave e\airlift replacement\plot files\10 DIGITAL INPUT SCHEMATIC SHEET 3 OF 3.dwg
lowthir May-11-16 6:40am

SHOP AS-BUILT DRAWINGS REV C

DIGITAL INPUT SCHEMATIC SHEET 3 OF 3

APPROVED FOR ADVERTISING
NANCY LOCKE
DEPARTMENT OF FINANCE & ADMINISTRATIVE SERVICES
SEATTLE, WASHINGTON 20
BY:
PURCHASING & CONTRACTING SERVICES DIRECTOR

INITIALS AND DATE	INITIALS AND DATE
DESIGNED RL	REVIEWED:
CHECKED IS	DES. CONST.
	SDOT PROJ. MGR.
DRAWN RL	RECEIVED
CHECKED IS	REVISED AS BUILT

ALL WORK SHALL BE DONE IN ACCORDANCE WITH THE CITY OF SEATTLE STANDARD PLANS AND SPECIFICATIONS AND OTHER DOCUMENTS CALLED FOR IN SECTION 0-02.3 OF THE PROJECT MANUAL.

STATE OF WASHINGTON 37048 REGISTERED PROFESSIONAL ENGINEER

Seattle Public Utilities
City of Seattle
Ray Hoffman, Director
ORDINANCE NO. Ordinance Number APPROVED
FUND: Fund
SCALE: AS SHOWN INSPECTOR'S BOOK

PUMP STATION 050
AIRLIFT REPLACEMENT:
2534 39TH AVE. E.

JOB NO. PC C314050
R/W
CO C314050
VAULT PLAN NO.
SHEET 11 OF 16

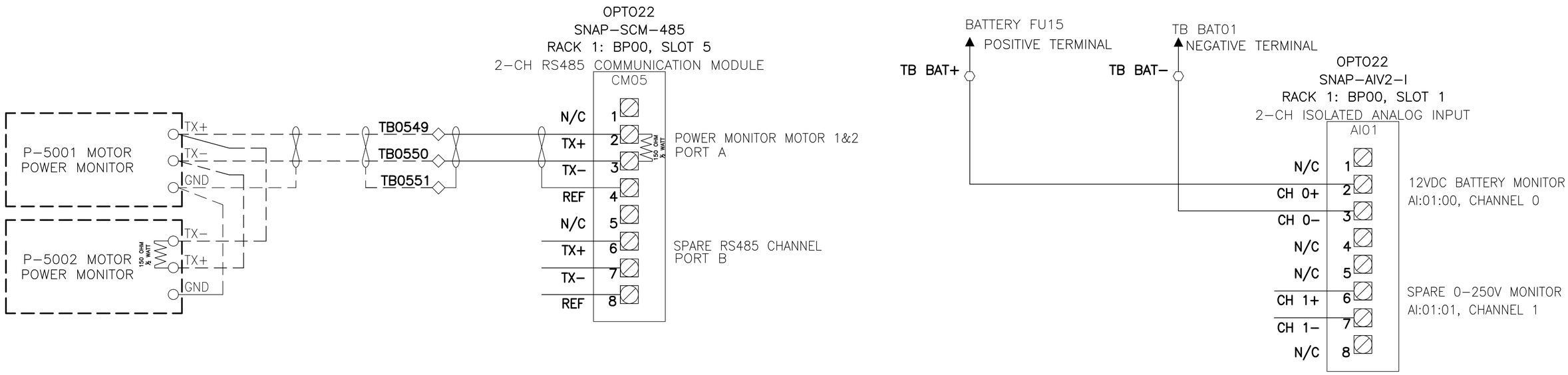

ANALOG INPUT SCHEMATIC SHEET 1 OF 2

SHOP AS-BUILT DRAWINGS REV C

APPROVED FOR ADVERTISING
NANCY LOCKE
DEPARTMENT OF FINANCE & ADMINISTRATIVE SERVICES
SEATTLE, WASHINGTON 20
BY:
PURCHASING & CONTRACTING SERVICES DIRECTOR

INITIALS AND DATE	INITIALS AND DATE
DESIGNED RL	REVIEWED:
CHECKED IS	DES. CONST.
	SDOT PROJ. MGR.
DRAWN RL	RECEIVED
CHECKED IS	REVISED AS BUILT

ALL WORK SHALL BE DONE IN ACCORDANCE WITH THE CITY OF SEATTLE STANDARD PLANS AND SPECIFICATIONS AND OTHER DOCUMENTS CALLED FOR IN SECTION 0-02.3 OF THE PROJECT MANUAL.

STATE OF WASHINGTON 37048 REGISTERED PROFESSIONAL ENGINEER

Seattle Public Utilities
City of Seattle
Ray Hoffman, Director
ORDINANCE NO. Ordinance Number
APPROVED
FUND: Fund
SCALE: AS SHOWN
INSPECTOR'S BOOK

PUMP STATION 050
AIRLIFT REPLACEMENT:
2534 39TH AVE. E.

JOB NO. PC C314050
R/W
CO C314050
VAULT PLAN NO.
SHEET 12 OF 16

VAULT SERIAL NO.	DATE	MARK	NATURE REVISIONS	MADE	CHK'D	REV'D

SCHEMATIC SHEET 1 OF 2.dwg

J:\FldOps\WS691\Secure\scada sites info (operational)\dww lift stations\sta50_39 ave e\airlift replacement\plot files\11 ANALOG INPUT
lowthir May-11-16 6:40am

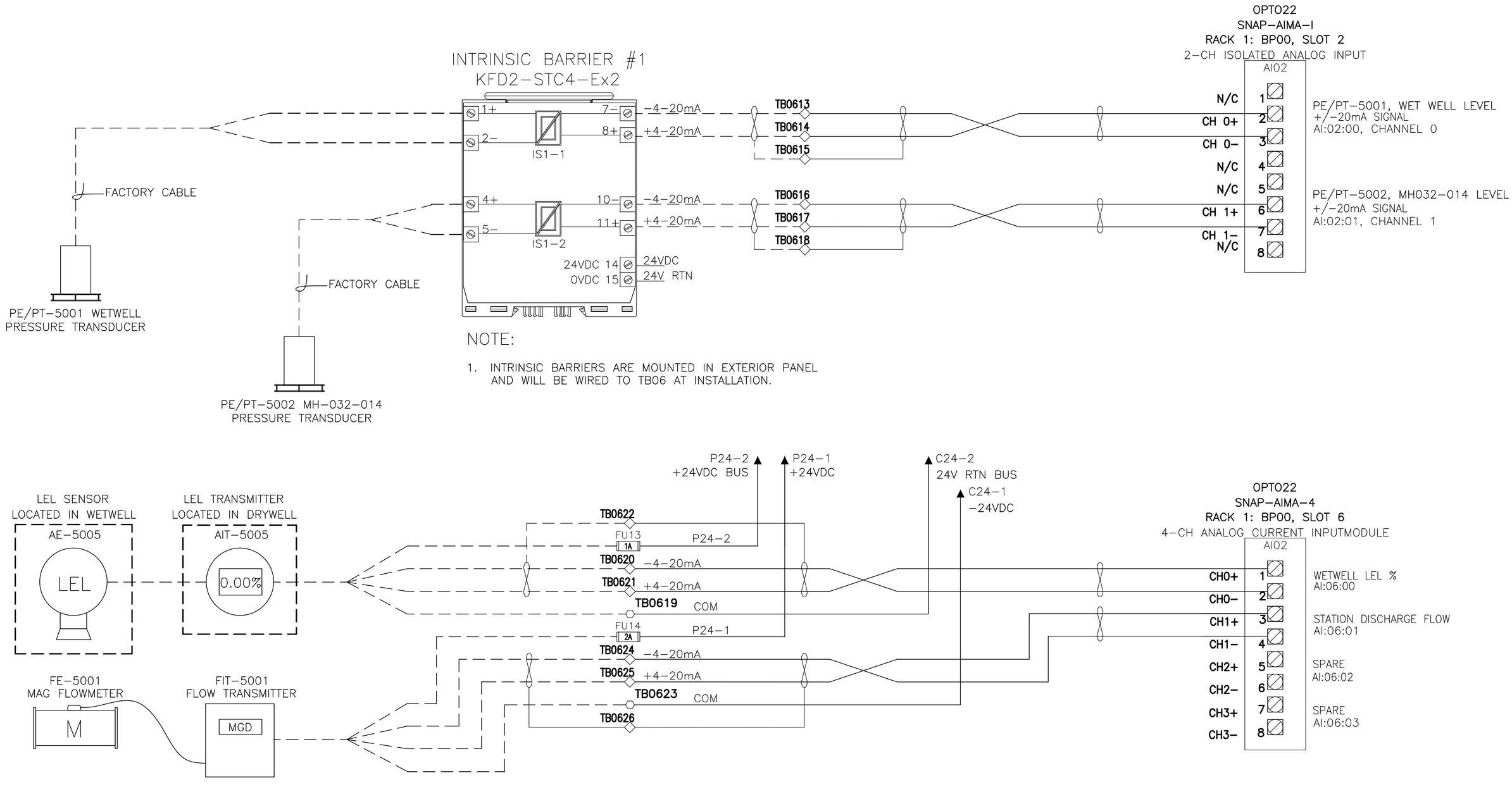

SHOP AS-BUILT DRAWINGS REV C

ANALOG INPUT SCHEMATIC SHEET 2 OF 2

APPROVED FOR ADVERTISING
NANCY LOCKE
DEPARTMENT OF FINANCE & ADMINISTRATIVE SERVICES
SEATTLE, WASHINGTON 20
BY:
PURCHASING & CONTRACTING SERVICES DIRECTOR

INITIALS AND DATE		INITIALS AND DATE	
DESIGNED	RL	REVIEWED:	
CHECKED	IS	DES.	CONST.
		SDOT	PROJ. MGR.
DRAWN	RL	RECEIVED	
CHECKED	IS	REVISED AS BUILT	

ALL WORK SHALL BE DONE IN ACCORDANCE WITH THE CITY OF SEATTLE STANDARD PLANS AND SPECIFICATIONS AND OTHER DOCUMENTS CALLED FOR IN SECTION 0-02.3 OF THE PROJECT MANUAL.

STATE OF WASHINGTON · RAMA SUNIL SINHA · 37048 · REGISTERED PROFESSIONAL ENGINEER

Seattle Public Utilities
City of Seattle
Ray Hoffman, Director

ORDINANCE NO. Ordinance Number
APPROVED
FUND: Fund
SCALE: AS SHOWN
INSPECTOR'S BOOK

PUMP STATION 050
AIRLIFT REPLACEMENT:
2534 39TH AVE. E.

JOB NO. PC C314050 R/W CO C314050
VAULT PLAN NO.
SHEET 13 OF 16

VAULT SERIAL NO.	DATE	MARK	NATURE REVISIONS	MADE	CHK'D	REV'D
SCHEMATIC SHEET 2 OF 2.dwg						

J:\FldOps\WS691\Secure\scada sites info (operational)\dww lift stations\sta50_39 ave e\airlift replacement\plot files\12 ANALOG INPUT lowlhir May-11-16 6:40pm

SCADA TERMINALS

FIELD ACCESS TERMINALS

TB0551 RS485–GND BUS
TB0550 RS485–DATA– BUS
TB0549 RS485–DATA+ BUS

L1 L2 L3 TO MAIN BUS

120VAC
NEU
POWER SUPPLY

PFR 1 3 AC POWER FAIL MCC POWER MONITOR
PR1 RUN RELAY
NO PR1–1 CONTACT
NO PR1–2 CONTACT

L3 FU# 1A 7 L3
L2 FU# 1A 6 L2
L1 FU# 1A 5 L1
CONNECT TO PHASE FAIL RELAY CIRCUIT

GND
NEU
120VAC
POWER SUPPLY

SHLD SHLD

32 GND
31 DATA +
30 DATA –
13 PE 14 – 15 +
ES2105AS EMMOD 201
I1 1 I1 3 I2 4 I2 6 I3 7 I3 9
CAMILLE BAUER LTD POWER MONITOR ES2105AS WITH EMMOND201 INTERFACE

L3 CB XX A L3 M1 T3
L2 L2 T2
L1 L1 T1
CT1 CT2 CT3
MOTOR 1 XX HP XXX VAC XX AMPS

FU# 1A
FU# 1A
XXX/120VAC

P1/L1–120VAC FU# 2A
NEU

P1/L1–120VAC BUS

GND
NEU
120VAC
POWER SUPPLY

SHLD SHLD

32 GND
31 DATA +
30 DATA –
13 PE 14 – 15 +
ES2105AS EMMOD 201
I1 1 I1 3 I2 4 I2 6 I3 7 I3 9
CAMILLE BAUER LTD POWER MONITOR ES2105AS WITH EMMOND201 INTERFACE

L3 CB XX A L3 M2 T3
L2 L2 T2
L1 L1 T1
CT1 CT2 CT3
MOTOR 2 XX HP XXX VAC XX AMPS

FU# 1A
FU# 1A
XXX/120VAC

P2/L1–120VAC FU# 2A
NEU

P2/L1–120VAC BUS

TYP. MCC PANEL

SHOP AS-BUILT DRAWINGS REV C

APPROVED FOR ADVERTISING
NANCY LOCKE
DEPARTMENT OF FINANCE & ADMINISTRATIVE SERVICES
SEATTLE, WASHINGTON 20
BY: PURCHASING & CONTRACTING SERVICES DIRECTOR

INITIALS AND DATE		INITIALS AND DATE	
DESIGNED	RL	REVIEWED:	
CHECKED	IS	DES.	CONST.
		SDOT	PROJ. MGR.
DRAWN	RL	RECEIVED	
CHECKED	IS	REVISED AS BUILT	

ALL WORK SHALL BE DONE IN ACCORDANCE WITH THE CITY OF SEATTLE STANDARD PLANS AND SPECIFICATIONS AND OTHER DOCUMENTS CALLED FOR IN SECTION 0–02.3 OF THE PROJECT MANUAL.

STATE OF WASHINGTON 37048 REGISTERED PROFESSIONAL ENGINEER

Seattle Public Utilities
City of Seattle
Ray Hoffman, Director

ORDINANCE NO. Ordinance Number APPROVED
FUND: Fund
SCALE: AS SHOWN INSPECTOR'S BOOK

TYPICAL MCC & SCADA CONTROL

PUMP STATION 050 AIRLIFT REPLACEMENT: 2534 39TH AVE. E.

JOB NO. PC C314050 R/W CO C314050
VAULT PLAN NO.
SHEET 14 OF 16

VAULT	SERIAL NO.	DATE	MARK	NATURE REVISIONS	MADE	CHK'D	REV'D

J:\FldOps\WS691\Secure\scada sites info (operational)\dww lift stations\std50_39 ave e\airlift replacement\plot files\13 TYPICAL MCC + SCADA CONTROL.dwg
lowthir May-11-16 6:40am

I/O FUNCTION TABLE

MODULE	DEVICE TAG	DESCRIPTION	CHANNEL	SIGNAL TYPE	MIN/0	MAX/1
IDC-32	LSHH-5002	DRYWELL FLOOD	00:00	0 OR 24VDC	ALARM	NORMAL
			00:01	0 OR 24VDC		
			00:02	0 OR 24VDC		
			00:03	0 OR 24VDC		
	PFR-5000	AC POWER FAIL	00:04	0 OR 24VDC	ALARM	NORMAL
	P-5001	PUMP 5001 RUNNING	00:05	0 OR 24VDC	OFF	ON
	P-5002	PUMP 5002 RUNNING	00:06	0 OR 24VDC	OFF	ON
	IS-5003	SUMP PUMP RUNNING	00:07	0 OR 24VDC	OFF	ON
			00:08	0 OR 24VDC		
			00:09	0 OR 24VDC		
			00:10	0 OR 24VDC		
			00:11	0 OR 24VDC		
	QL-5001	PUMP 1 DISCONNECT OPEN	00:12	0 OR 24VDC	ALARM	NORMAL
	QL-5002	PUMP 2 DISCONNECT OPEN	00:13	0 OR 24VDC	ALARM	NORMAL
	IS-5010	DRYWELL SUPPLY FAN RUNNING	00:14	0 OR 24VDC	ON	OFF
	IS-5021	WETWELL EXHAUST FAN RUNNING	00:15	0 OR 24VDC	ON	OFF
	LSH-5002	WETWELL HIGH LEVEL	00:16	0 OR 24VDC	ALARM	NORMAL
	LSHH-5003	WETWELL OVERFLOW	00:17	0 OR 24VDC	ALARM	NORMAL
	TH-5001	PUMP 5001 MOTOR OVERTEMP	00:18	0 OR 24VDC	NORMAL	ALARM
	SLK-5001	PUMP 5001 SEAL LEAK	00:19	0 OR 24VDC	ALARM	NORMAL
	TH-5002	PUMP 5002 MOTOR OVERTEMP	00:20	0 OR 24VDC	NORMAL	ALARM
	SLK-5002	PUMP 5002 SEAL LEAK	00:21	0 OR 24VDC	ALARM	NORMAL
	HS-5001	P-5001 HOA IN HAND POSITION	00:22	0 OR 24VDC	OFF	HAND
		P-5001 HOA IN AUTO POSITION	00:23	0 OR 24VDC	OFF	AUTO
	HS-5002	P-5002 HOA IN HAND POSITION	00:24	0 OR 24VDC	OFF	HAND
		P-5002 HOA IN AUTO POSITION	00:25	0 OR 24VDC	OFF	AUTO
			00:26	0 OR 24VDC		
	YI-5001	BATTERY READY	00:27	0 OR 24VDC	ALARM	NORMAL
	YI-5002	BATTERY DISCHARGING	00:28	0 OR 24VDC	NORMAL	ALARM
	YI-5003	REPLACE BATTERY	00:29	0 OR 24VDC	NORMAL	ALARM
	ZS-5000	SCADA CABINET INTRUSION	00:30	0 OR 24VDC	ALARM	NORMAL
			00:31	0 OR 24VDC		
AIV-2-i	EE-5000	BATTERY VOLTAGE	01:00	0 - 100 VDC	0.00VDC	100 VDC
			01:01	0 - 100 VDC		
AIMAi	PE/PT-5001	WETWELL LEVEL PRESSURE	02:00	4-20mA	0.00'	TBD
	PE/PT-5002	MH032-014 LEVEL PRESSURE	02:01	4-20mA	0.00'	TBD
ODC5-SRC	CR-1	PUMP 5001 START COMMAND	03:00	0 OR 24VDC	OFF	ON
	CR-2	PUMP 5002 START COMMAND	03:01	0 OR 24VDC	OFF	ON
	CR-3		03:02	0 OR 24VDC		
	CR-4		03:03	0 OR 24VDC		

SHOP AS-BUILT DRAWINGS REV C

PANEL I/O ASSIGNMENTS SHEET 1 OF 2

APPROVED FOR ADVERTISING
NANCY LOCKE
DEPARTMENT OF FINANCE & ADMINISTRATIVE SERVICES
SEATTLE, WASHINGTON 20
BY:
PURCHASING & CONTRACTING SERVICES DIRECTOR

INITIALS AND DATE		INITIALS AND DATE	
DESIGNED	RL	REVIEWED:	
CHECKED	IS	DES.	CONST.
		SDOT	PROJ. MGR.
DRAWN	RL	RECEIVED	
CHECKED	IS	REVISED AS BUILT	

ALL WORK SHALL BE DONE IN ACCORDANCE WITH THE CITY OF SEATTLE STANDARD PLANS AND SPECIFICATIONS AND OTHER DOCUMENTS CALLED FOR IN SECTION 0-02.3 OF THE PROJECT MANUAL.

IRAM S. NISSANA — STATE OF WASHINGTON — 37048 — REGISTERED PROFESSIONAL ENGINEER

Seattle Public Utilities
City of Seattle
Ray Hoffman, Director

ORDINANCE NO. Ordinance Number | APPROVED
FUND: Fund
SCALE: AS SHOWN | INSPECTOR'S BOOK

PUMP STATION 050 AIRLIFT REPLACEMENT: 2534 39TH AVE. E.

JOB NO. PC C314050 R/W CO C314050
VAULT PLAN NO.
SHEET 15 OF 16

VAULT	SERIAL NO.	DATE	MARK	NATURE	MADE	CHK'D	REV'D
				REVISIONS			

J:\FldOps\WS691\Secure\scada sites info (operational)\dew lift stations\sta50_39 ave e\airlift replacement\plot files\14 PANEL I_O ASSIGNMENTS SHEET 1 OF 2.dwg
lowthir May-11-16 6:40am

I/O FUNCTION TABLE

MODULE	DEVICE TAG	DESCRIPTION	CHANNEL	SIGNAL TYPE	MIN/0	MAX/1
ODC5i	IDEC SMT RLY	PLC ACTIVE TO IDEC SMART RELAY	04:00	0 OR 24VDC	FAIL	ACTIVE
			04:01	0 OR 24VDC		
			04:02	0 OR 24VDC		
			04:03	0 OR 24VDC		
SCM-485		PUMP P-5001 & P-5002 MOTOR DATA	05:CH:A	MODBUS	VARIES	
			05:CH:B	MODBUS		
AIMA-4	AIT-5005	WETWELL LEL CONCENTRATION % LEL	06:00	4-20mA	0.00%	100%
	FIT-5001	PS-50 DISCHARGE FLOW	06:01	4-20mA	0.00 GPM	TBD
			06:02	4-20mA		
			06:03	4-20mA		
IDC-32	CR5/2	DRYWELL SUPPLY AIR FAN LOW FLOW (FSL-5010)	07:00	0 OR 24VDC	ALARM	NORMAL
	CR6/2	DRYWELL EXHAUST AIR FAN LOW FLOW (FSL-5011)	07:01	0 OR 24VDC	ALARM	NORMAL
	ASH-5005	WETWELL LEL HIGH ALARM	07:02	0 OR 24VDC	NORMAL	ALARM
	ASF-5005	WETWELL LEL INSTRUMENT FAULT	07:03	0 OR 24VDC	ALARM	NORMAL
	IS-5011	DRYWELL EXHAUST FAN RUNNING	07:04	0 OR 24VDC	ON	OFF
	IS-5020	WETWELL SUPPLY FAN RUNNING	07:05	0 OR 24VDC	ON	OFF
		PUMP 1 DISCONNECT OPEN	07:06	0 OR 24VDC	ALARM	NORMAL
		PUMP 2 DISCONNECT OPEN	07:07	0 OR 24VDC	ALARM	NORMAL
			07:08	0 OR 24VDC		
			07:09	0 OR 24VDC		
			07:10	0 OR 24VDC		
			07:11	0 OR 24VDC		
			07:12	0 OR 24VDC		
			07:13	0 OR 24VDC		
			07:14	0 OR 24VDC		
			07:15	0 OR 24VDC		
		NOT WIRED	07:16	0 OR 24VDC		
		NOT WIRED	07:17	0 OR 24VDC		
		NOT WIRED	07:18	0 OR 24VDC		
		NOT WIRED	07:19	0 OR 24VDC		
		NOT WIRED	07:20	0 OR 24VDC		
		NOT WIRED	07:21	0 OR 24VDC		
		NOT WIRED	07:22	0 OR 24VDC		
		NOT WIRED	07:23	0 OR 24VDC		
		NOT WIRED	07:24	0 OR 24VDC		
		NOT WIRED	07:25	0 OR 24VDC		
		NOT WIRED	07:26	0 OR 24VDC		
		NOT WIRED	07:27	0 OR 24VDC		
		NOT WIRED	07:28	0 OR 24VDC		
		NOT WIRED	07:29	0 OR 24VDC		
		NOT WIRED	07:30	0 OR 24VDC		
		NOT WIRED	07:31	0 OR 24VDC		

SHOP AS-BUILT DRAWINGS REV C

PANEL I_O ASSIGNMENTS SHEET 2 OF 2

APPROVED FOR ADVERTISING
NANCY LOCKE
DEPARTMENT OF FINANCE & ADMINISTRATIVE SERVICES
SEATTLE, WASHINGTON 20

BY:
PURCHASING & CONTRACTING SERVICES DIRECTOR

INITIALS AND DATE	
DESIGNED RL	
CHECKED IS	
DRAWN RL	
CHECKED IS	

INITIALS AND DATE	
REVIEWED:	
DES.	CONST.
SDOT	PROJ. MGR.
RECEIVED	
REVISED AS BUILT	

ALL WORK SHALL BE DONE IN ACCORDANCE WITH THE CITY OF SEATTLE STANDARD PLANS AND SPECIFICATIONS AND OTHER DOCUMENTS CALLED FOR IN SECTION 0-02.3 OF THE PROJECT MANUAL.

LINA SINISSANA — STATE OF WASHINGTON — 37048 — REGISTERED PROFESSIONAL ENGINEER

Seattle Public Utilities
City of Seattle
Ray Hoffman, Director

ORDINANCE NO. Ordinance Number | APPROVED
FUND: Fund
SCALE: AS SHOWN | INSPECTOR'S BOOK

PUMP STATION 050 AIRLIFT REPLACEMENT: 2534 39TH AVE. E.

JOB NO. PC C314050 R/W CO C314050
VAULT PLAN NO.
SHEET 16 OF 16

VAULT	SERIAL NO.	DATE	MARK	NATURE REVISIONS	MADE	CHK'D	REV'D

J:\FldOps\WS691\Secure\scada sites info (operational)\dww lift stations\sta50_39 ave e\airlift replacement\plot files\15 PANEL I_O ASSIGNMENTS SHEET 2 OF 2.dwg
lowthir May-11-16 6:40am

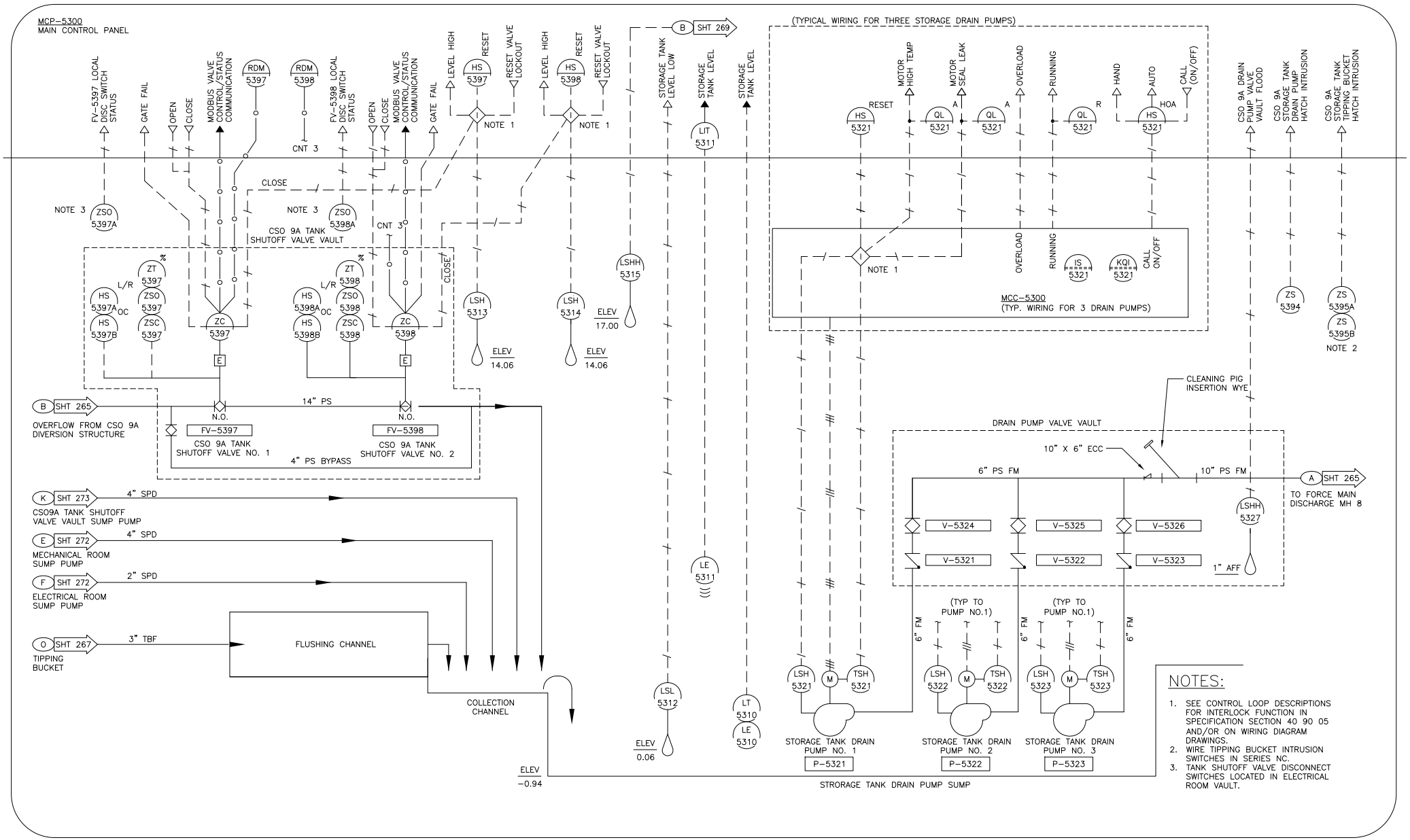
MCP-5300
MAIN CONTROL PANEL
FV-5397 LOCAL DISC SWITCH STATUS
GATE FAIL
OPEN
CLOSE
MODBUS VALVE CONTROL/STATUS COMMUNICATION
RDM 5397
RDM 5398
CNT 3
FV-5398 LOCAL DISC SWITCH STATUS
LEVEL HIGH
HS 5397
RESET
RESET VALVE LOCKOUT
HS 5398
NOTE 1
STORAGE TANK LEVEL LOW
STORAGE TANK LEVEL
LIT 5311
B SHT 269
(TYPICAL WIRING FOR THREE STORAGE DRAIN PUMPS)
HS 5321
RESET
MOTOR HIGH TEMP
MOTOR SEAL LEAK
QL 5321
OVERLOAD
RUNNING
HAND
AUTO
HOA
CALL (ON/OFF)
CSO 9A DRAIN PUMP VALVE VAULT FLOOD
CSO 9A STORAGE TANK DRAIN PUMP HATCH INTRUSION
CSO 9A STORAGE TANK TIPPING BUCKET HATCH INTRUSION
NOTE 3
ZSO 5397A
ZSO 5398A
CSO 9A TANK SHUTOFF VALVE VAULT
ZT 5397
ZSO 5397
ZSC 5397
ZC 5397
ZT 5398
ZSO 5398
ZSC 5398
ZC 5398
HS 5397A
HS 5397B
HS 5398A
HS 5398B
L/R
OC
CLOSE
LSH 5313
LSH 5314
ELEV 14.06
ELEV 17.00
LSHH 5315
MCC-5300
(TYP. WIRING FOR 3 DRAIN PUMPS)
IS 5321
KQL 5321
ZS 5394
ZS 5395A
ZS 5395B
NOTE 2
B SHT 265
OVERFLOW FROM CSO 9A DIVERSION STRUCTURE
14" PS
N.O.
FV-5397
CSO 9A TANK SHUTOFF VALVE NO. 1
FV-5398
CSO 9A TANK SHUTOFF VALVE NO. 2
4" PS BYPASS
CLEANING PIG INSERTION WYE
DRAIN PUMP VALVE VAULT
10" X 6" ECC
6" PS FM
10" PS FM
A SHT 265
TO FORCE MAIN DISCHARGE MH 8
LSHH 5327
1" AFF
V-5324
V-5325
V-5326
V-5321
V-5322
V-5323
K SHT 273
4" SPD
CSO9A TANK SHUTOFF VALVE VAULT SUMP PUMP
E SHT 272
MECHANICAL ROOM SUMP PUMP
F SHT 272
2" SPD
ELECTRICAL ROOM SUMP PUMP
O SHT 267
3" TBF
TIPPING BUCKET
FLUSHING CHANNEL
COLLECTION CHANNEL
LSL 5312
LE 5311
LT 5310
LE 5310
ELEV 0.06
ELEV -0.94
(TYP TO PUMP NO.1)
6" FM
LSH 5321
TSH 5321
LSH 5322
TSH 5322
LSH 5323
TSH 5323
M
STORAGE TANK DRAIN PUMP NO. 1
P-5321
STORAGE TANK DRAIN PUMP NO. 2
P-5322
STORAGE TANK DRAIN PUMP NO. 3
P-5323
STORAGE TANK DRAIN PUMP SUMP
NOTES:
1. SEE CONTROL LOOP DESCRIPTIONS FOR INTERLOCK FUNCTION IN SPECIFICATION SECTION 40 90 05 AND/OR ON WIRING DIAGRAM DRAWINGS.
2. WIRE TIPPING BUCKET INTRUSION SWITCHES IN SERIES NC.
3. TANK SHUTOFF VALVE DISCONNECT SWITCHES LOCATED IN ELECTRICAL ROOM VAULT.

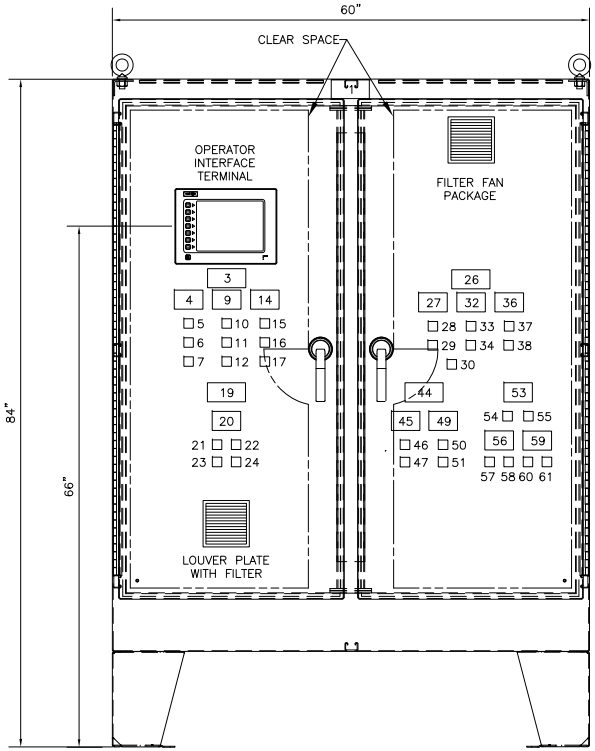

NEMA 4X SS ENCLOSURE

FRONT VIEW ELEVATION

MAIN CONTROL PANEL MCP-4900

NTS

NOTES:

1. PROVIDE OSHA APPROVED ELECTRICAL DANGER SIGN ON DOOR INDICATING MULTIPLE POWER SOURCES/BREAKERS.
2. PANEL DEVICES NOT TO SCALE. SHOWN LARGER THAN ACTUAL SIZE FOR CLARITY.

MCP-4900 NAMEPLATE SCHEDULE

ITEM NUMBER	LEGEND PLATE INSCRIPTION (LINE 1 / LINE 2 / LINE 3)	NAMEPLATE INSCRIPTION (LINE 1 / LINE 2 / LINE 3)
1		MAIN CONTROL PANEL/MCP-4900
2		
3		CSO 11A/STORAGE TANK/DRAIN PUMPS
4		STORAGE TANK/DRAIN PUMP NO. 1/P-4921
5	RUNNING	
6	HAND-OFF-AUTO	
7	RESET/LEAK & HIGH TEMP	
8		
9		STORAGE TANK/DRAIN PUMP NO. 2/P-4922
10	RUNNING	
11	HAND-OFF-AUTO	
12	RESET/LEAK & HIGH TEMP	
13		
14		STORAGE TANK/DRAIN PUMP NO. 3/P-4923
15	RUNNING	
16	HAND-OFF-AUTO	
17	RESET/LEAK & HIGH TEMP	
18		
19		ODOR CONTROL
20		ODOR CONTROL FAN/EF-4940
21	RUNNING	
22	HAND-OFF-AUTO	
23	SHUTDOWN	
24	RESET	
25		
26		CLEAN WATER SYSTEM
27		TIPPING BUCKET/FILL PUMP NO. 1/P-4981
28	RUNNING	
29	HAND-OFF-AUTO	
30	RESET/LOW LEVEL	
31		
32		TIPPING BUCKET/FILL PUMP NO. 2/P-4982
33	RUNNING	
34	HAND-OFF-AUTO	
35		
36		TIPPING BUCKET/DRAIN VALVE/FV-4980
37	HAND-OFF-AUTO	
38	OPEN-STOP-CLOSE	
39		
40		
41		
42		
43		

MCP-4900 NAMEPLATE SCHEDULE CONTINUED

ITEM NUMBER	LEGEND PLATE INSCRIPTION (LINE 1 / LINE 2 / LINE 3)	NAMEPLATE INSCRIPTION (LINE 1 / LINE 2 / LINE 3)
44		TIPPING BUCKET/FILL VALVES
45		TIPPING BUCKET/FILL VALVE NO. 1/FV-4981
46	HAND-OFF AUTO	
47	OPEN-STOP-CLOSE	
48		
49		TIPPING BUCKET/FILL VALVE NO. 2/FV-4982
50	HAND-OFF AUTO	
51	OPEN-STOP-CLOSE	
52		
53		AIR GAP TANK VALVES
54	FILL	
55	STOP (LOS)	
56		FILL VALVE FV-4946
57	OPEN	
58	CLOSED	
59		FILL VALVE FV-4947
60	OPEN	
61	CLOSED	
62		
63		
64		
65		
66		
67		
68		
69		
70		
71		
72		
73		
74		
75		

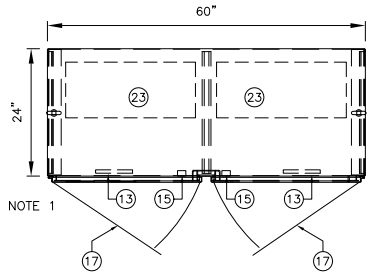

PLAN VIEW

CONTROL CABINET (INTERIOR VIEW W/ DOORS)

NTS

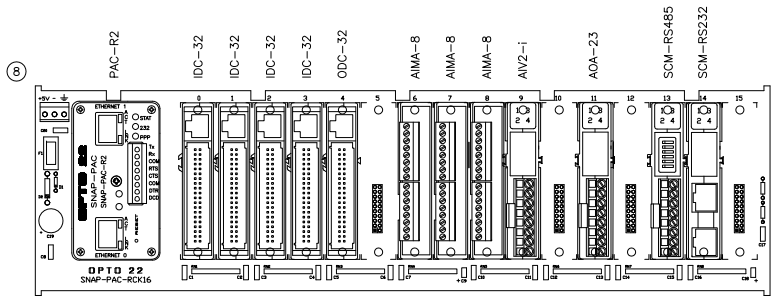

TYPICAL PLC RACK LAYOUT

NTS

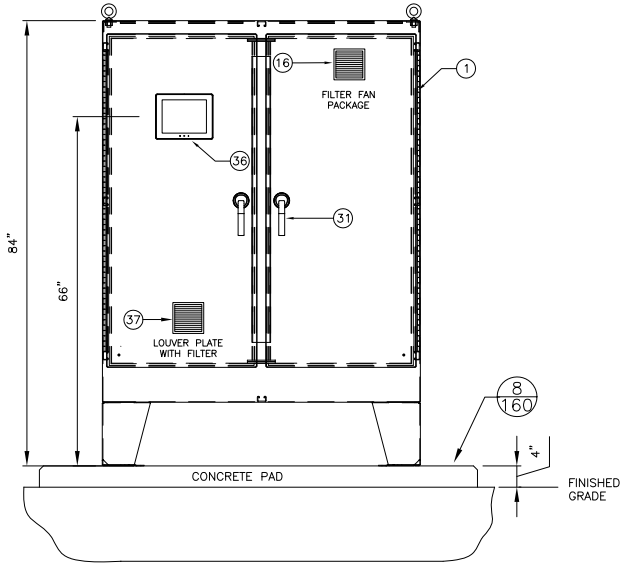

CONTROL CABINET EXTERIOR ELEVATION

NTS

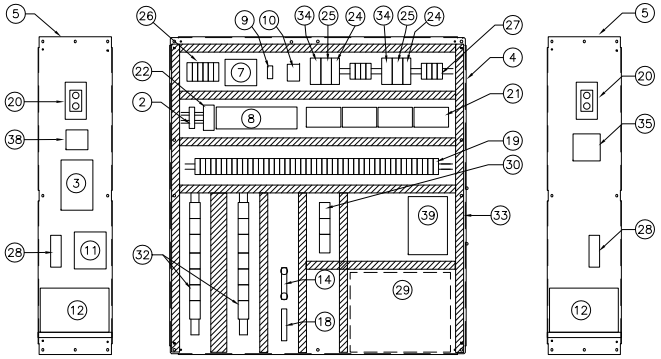

GENERAL NOTES:

1. COMPONENTS MOUNTED ON BACK PANEL NOT SHOWN IN PLAN VIEW.

FRONT VIEW ELEVATION

CONTROL CABINET (ELEVATION INTERIOR VIEW)

NTS

KEYNOTES:

1. MCP ENCLOSURE
2. ETHERNET SWITCH
3. ROUTER (SUPPLIED BY SPU)
4. BACK PANEL
5. SIDE PANEL
6. NETWORK INTERFACE UNIT ((NIU) SUPPLIED BY CENTRYLINK)
7. SURGE PROTECTIVE DEVICE (TVSS) FOR I & C COMPARTMENT
8. PAC RACK (CPU & I/O MODULES)
9. AC POWER FAIL RELAY
10. COOLING THERMOSTAT
11. HEATER
12. DC UPS BATTERY (MOUNTED ON SHELF)
13. LED STRIP LIGHT, DOOR SWITCH ACTIVATED
14. ISOLATED GROUND BUS FOR ANALOG SHIELD GROUNDING
15. INTRUSION DOOR SWITCH; (FAIL SAFE) DISCRETE INPUT
16. SUPPLY FAN UNIT; MUST MAINTAIN SAME NEMA RATING AS ENCLOSURE
17. DOUBLE DOORS WITH EASILY REMOVABLE CENTER SUPPORT POST
18. GROUND BUS
19. RELAYS
20. GFCI RECEPTACLE
21. OPTO D/I INTERFACE BOARDS
22. OPTO 22 POWER SUPPLY
23. CONDUIT ENTRY AREA
24. POWER SUPPLY (24V DC–12V DC)
25. DC–UPS WITH BATTERY CHARGER
26. AC CIRCUIT BREAKERS AND FUSES
27. DC CIRCUIT BREAKERS AND FUSES
28. 30 AMP BATTERY CIRCUIT BREAKER
29. INTRINSICALLY SAFE AREA, INCLUDING INTRINSIC SAFETY BARRIERS, DESICCANT BOXES, ETC.
30. ANALOG TERMINALS
31. L–SHAPED, QUARTER TURN, PADLOCKABLE HANDLE, TYPICAL
32. TERMINAL BLOCKS
33. WIREWAY (SIZED AS REQUIRED)
34. POWER SUPPLY (120V AC – 24V DC)
35. PULSAR BLACKBOX LIT–5311 TRANSMITTER
36. OPERATOR INTERFACE
37. EXHAUST LOUVER; MUST MAINTAIN SAME NEMA RATING AS ENCLOSURE
38. MEDIA COMVERTER, ETHERNET TO SERIAL
39. GREYLINE FLOW TRANSMITTER

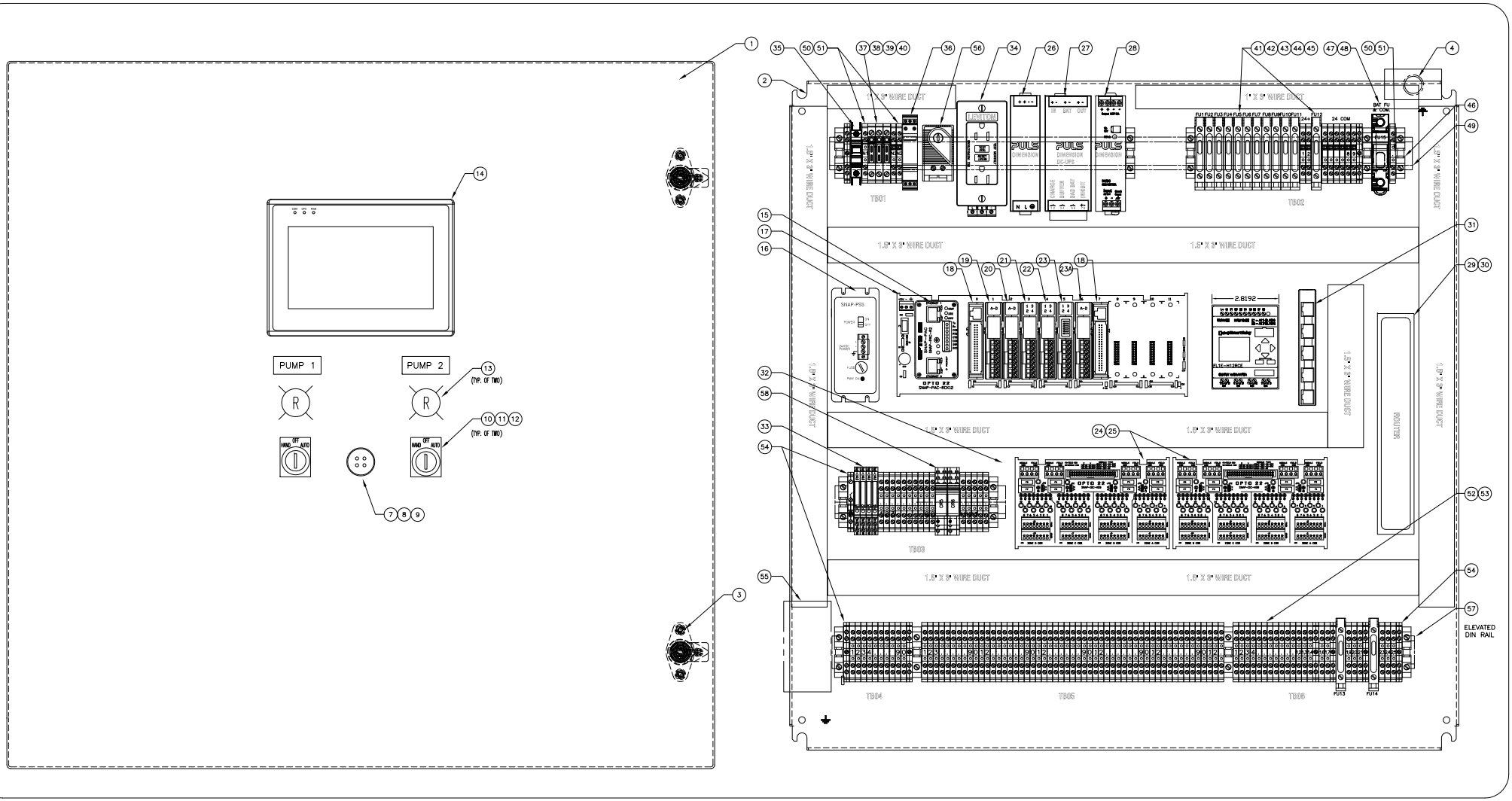
PUMP 1
PUMP 2
(TYP. OF TWO)
(TYP. OF TWO)
HAND
OFF
AUTO
1.5" X 3" WIRE DUCT
ROUTER
ELEVATED DIN RAIL

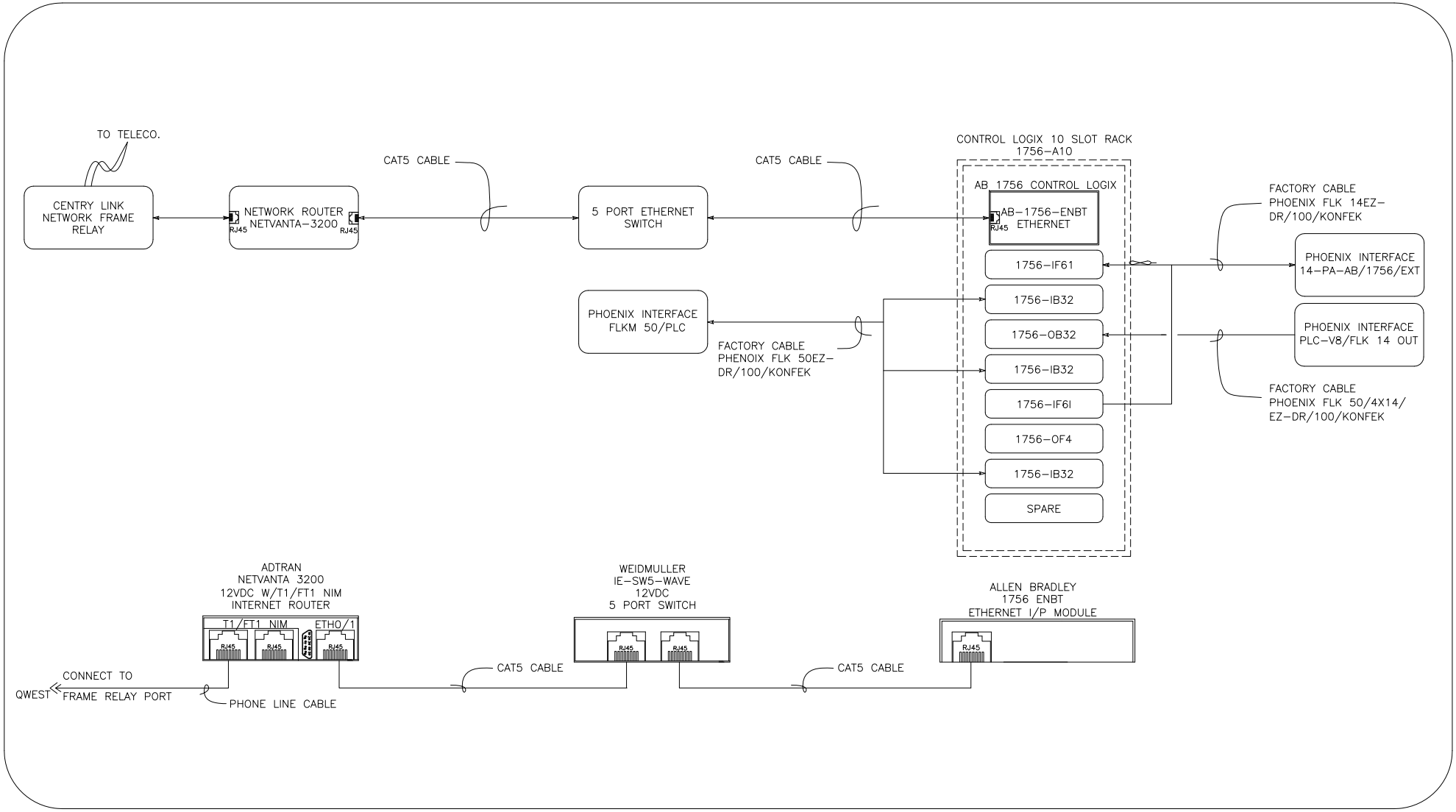

TYPICAL ALAN BRADLEY COMMUNICATIONS DIAGRAM